Product data sheet

Specifications

servo motor BMI 1-phase - untapped IP54 multiturn - 32768 p/t x 4096 t

BMI0702T07A

Product availability: Non-Stock - Not normally stocked in distribution facility

Price*: 1,351.03 USD

Main

Range Compatibility	Lexium 32i
Product Or Component Type	Servo motor with power stage
Device Short Name	BMI

Complementary

Maximum Mechanical Speed	8000 rpm
[Us] Rated Supply Voltage	115...230 V - 15...10 %
Supply Voltage Limits	100…240 V
Phase	Single phase
Supply Frequency	50/60 Hz - 5...5 %
Network Frequency Limits	47.5…63 Hz
Emc Filter	Integrated
Continuous Output Current	2.6 A 8 kHz
Output Current 3S Peak	10.5 A 230 V 1 s
Continuous Stall Current	2.6 A
Continuous Stall Torque	21.95 lbf.in (2.48 N.m) 115...230 V single phase
Peak Stall Torque	58.41 lbf.in (6.6 N.m) 115 V single phase 58.41 lbf.in (6.6 N.m) 230 V single phase
Nominal Output Power	700 W 230 V single phase 400 W 115 V single phase
Nominal Torque	19.47 lbf.in (2.2 N.m) 115 V single phase 15.05 lbf.in (1.7 N.m) 230 V single phase
Nominal Speed	4000 rpm 230 V single phase 1700 rpm 115 V single phase
Maximum Current Irms	17.7 A 230 V, single phase 17.7 A 115 V, single phase
Product Compatibility	Drive control unit LXM32i CANopen Drive control unit LXM32i EtherCAT
Shaft End	Untapped
Second Shaft	Without second shaft end
Shaft Diameter	0.43 in (11 mm)
Shaft Length	0.91 in (23 mm)
Feedback Type	Absolute multiturn SinCos Hiperface

Price is “List Price” and may be subject to a trade discount – check with your local distributor or retailer for actual price.

Disclaimer: This documentation is not intended as a substitute for and is not to be used for determining suitability or reliability of these products for specific user applications

Speed Feedback Resolution	32768 points/turn x 4096 turns
Holding Brake	Without
Mounting Support	International standard flange
Motor Flange Size	2.76 in (70 mm)
Electrical Connection	Printed circuit board connector
Torque Constant	0.63 N.m/A 68 °F (20 °C)
Back Emf Constant	42.1 V/krpm 68 °F (20 °C)
Number Of Motor Poles	10
Rotor Inertia	1.13 kg.cm²
Stator Resistance	2.7 Ohm 68 °F (20 °C)
Stator Inductance	7.8 mH 68 °F (20 °C)
Stator Electrical Time Constant	2.89 ms 68 °F (20 °C)
Maximum Radial Force Fr	710 N 1000 rpm 560 N 2000 rpm 490 N 3000 rpm 450 N 4000 rpm 410 N 5000 rpm 390 N 6000 rpm
Maximum Axial Force Fa	0.2 x Fr
Type Of Cooling	Natural convection
Length	10.55 in (268 mm)
Number Of Motor Stacks	2
Centring Collar Diameter	2.36 in (60 mm)
Centring Collar Depth	0.10 in (2.5 mm)
Number Of Mounting Holes	4
Mounting Holes Diameter	0.22 in (5.5 mm)
Circle Diameter Of The Mounting Holes	2.95…3.23 in (75…82 mm)
Distance Shaft Shoulder-Flange	0.10 in (2.5 mm)

Environment

Ip Degree Of Protection	Shaft IP54 Housing IP65

Ordering and shipping details

Category	US1PC5618287
Discount Schedule	PC56
Gtin	3606485376028
Returnability	No
Country Of Origin	DE

Packing Units

Unit Type Of Package 1	PCE
Number Of Units In Package 1	1
Package 1 Height	7.87 in (20.0 cm)

Package 1 Width	23.23 in (59.0 cm)
Package 1 Length	10.16 in (25.8 cm)
Package 1 Weight	11.90 lb(US) (5.4 kg)
Unit Type Of Package 2	P06
Number Of Units In Package 2	8
Package 2 Height	30.31 in (77.0 cm)
Package 2 Width	31.50 in (80.0 cm)
Package 2 Length	23.62 in (60.0 cm)
Package 2 Weight	113.98 lb(US) (51.7 kg)

Contractual warranty

Warranty	18 months

Sustainability

Green Premium™ label is Schneider Electric's commitment to delivering products with best-in-class environmental performance. Green Premium promises compliance with the latest regulations, transparency on environmental impacts, as well as circular and low-CO_2 products.

Guide to assessing product sustainability is a white paper that clarifies global eco-label standards and how to interpret environmental declarations.

Learn more about Green Premium >

Guide to assess a product's sustainability >

Transparency RoHS/REACh

Well-being performance

Mercury Free	
Rohs Exemption Information	Yes
Pvc Free	

Certifications & Standards

Reach Regulation	REACh Declaration
Eu Rohs Directive	Pro-active compliance (Product out of EU RoHS legal scope)
China Rohs Regulation	China RoHS declaration
Environmental Disclosure	Product Environmental Profile
Weee	The product must be disposed on European Union markets following specific waste collection and never end up in rubbish bins.
Circularity Profile	End of Life Information
California Proposition 65	WARNING: This product can expose you to chemicals including: Lead and lead compounds, which is known to the State of California to cause cancer and birth defects or other reproductive harm. For more information go to www.P65Warnings.ca.gov

Dimensions Drawings

External Dimensions

With Standard Braking Resistor

Mounting type A

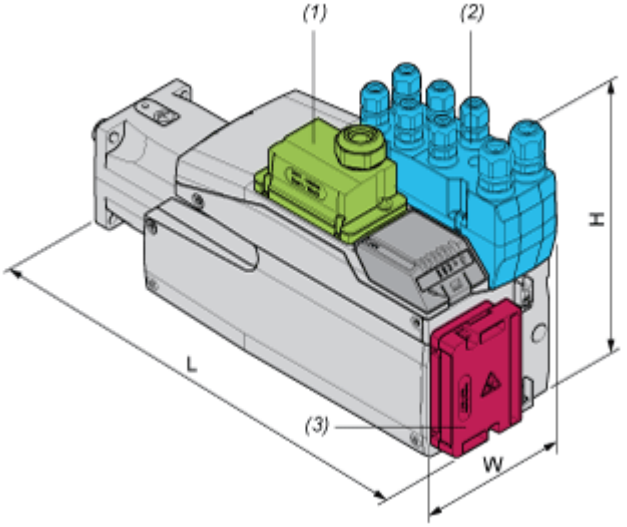

(1) Module for supply voltage

(2) I/O module

(3) Standard braking resistor

Dimensions in mm

W	H	L
99	187	289

Dimensions in in.

W	H	L
3,9	7,36	11,38

Mounting type B

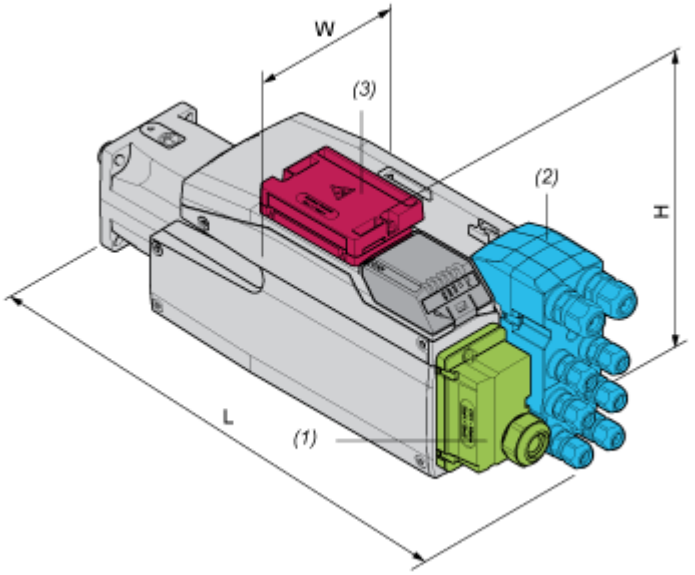

(1) Module for supply voltage

(2) I/O module

(3) Standard braking resistor

Dimensions in mm

W	H	L
99	138,5	338

Dimensions in in.

W	H	L
3,9	5,45	13,31

With External Braking Resistor

Mounting type C

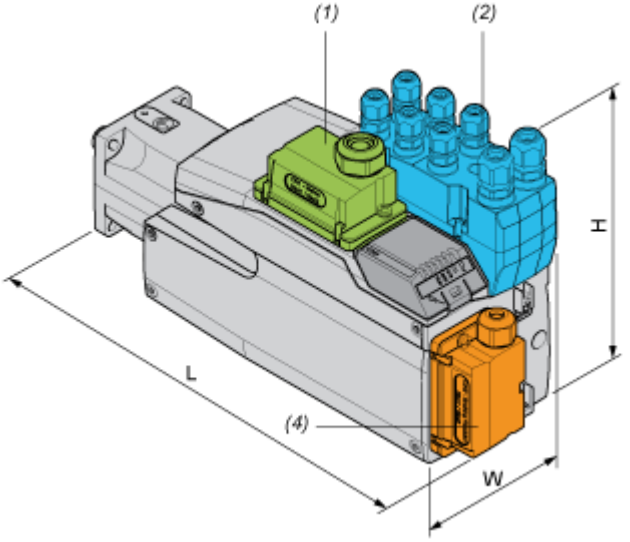

(1) Module for supply voltage

(2) I/O module

(4) External braking resistor

Dimensions in mm

W	H	L
99	187	301

Dimensions in in.

W	H	L
3,9	7,36	11,85

Mounting type D

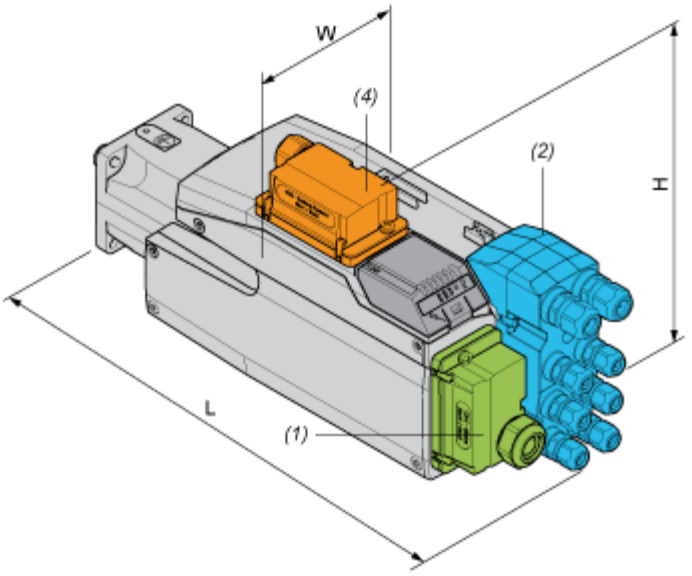

(1) Module for supply voltage

(2) I/O module

(4) External braking resistor

Dimensions in mm

W	H	L
99	160	338

Dimensions in in.

W	H	L
3,9	6,3	13,31

Mounting type E

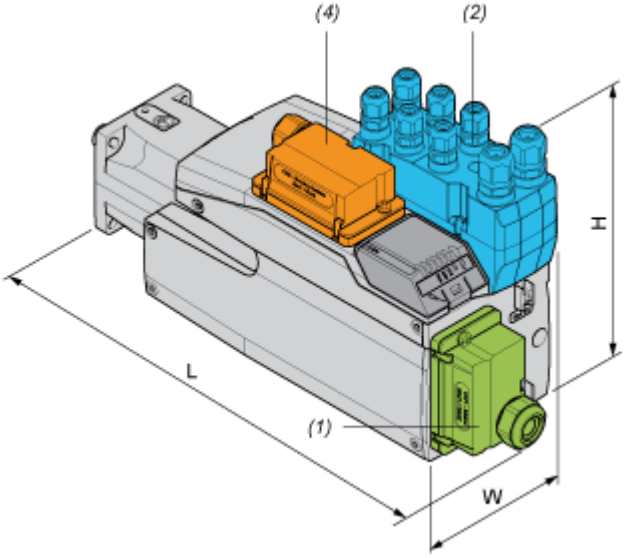

(1) Module for supply voltage

(2) I/O module

(4) External braking resistor

Dimensions in mm

W	H	L
99	187	328

Dimensions in in.

W	H	L
3,9	7,36	12,91

Mounting type F

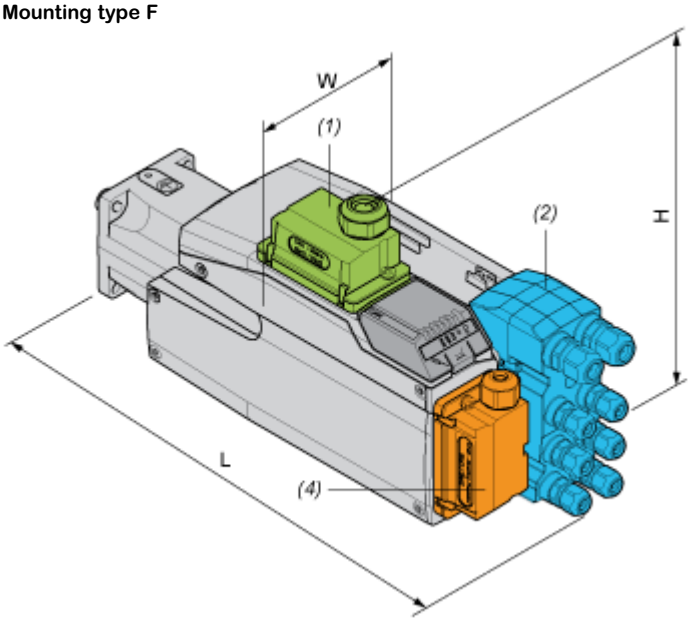

(1) Module for supply voltage

(2) I/O module

(4) External braking resistor

Dimensions in mm

W	H	L
99	180	338

Dimensions in in.

W	H	L
3,9	7,09	13,31

Performance Curves

Performance Curves

Torque/Speed Curves with 115 V Single Phase Supply Voltage

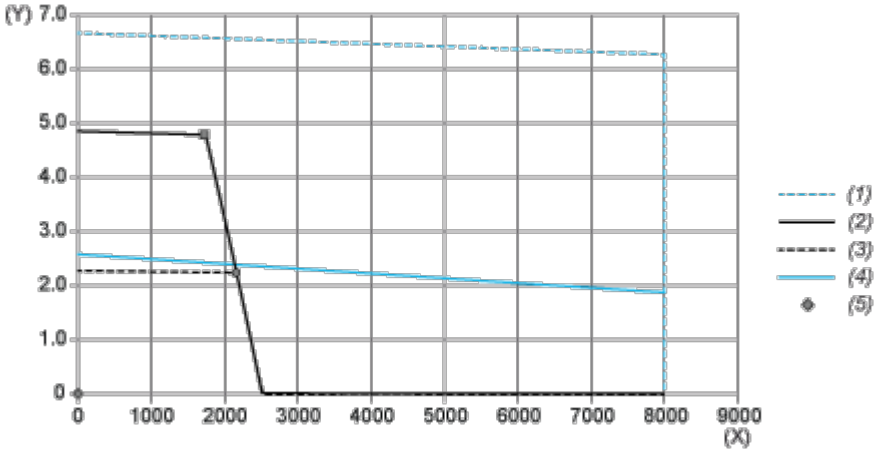

(X) Speed (rpm)

(Y) Torque (N.m)

(1) Motor peak

(2) Drive peak

(3) Drive cont

(4) Motor cont

(5) Operating point

		Power	At Speed	With Torque
max. Peak Power	■	860 W	1760 rpm	4.67 N.m
max Cont. Power (Drive)	●	499 W	2160 rpm	2.21 N.m

Performance Curves

Torque/Speed Curves with 230 V Single Phase Supply Voltage

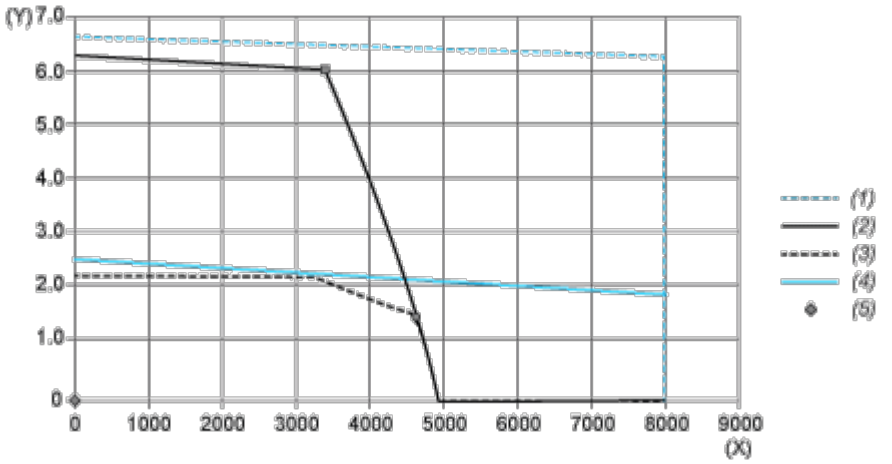

(X) Speed (rpm)

(Y) Torque (N.m)

(1) Motor peak

(2) Drive peak

(3) Drive cont

(4) Motor cont

(5) Operating point

		Power	At Speed	With Torque
max. Peak Power	■	2129 W	3360 rpm	6.05 N.m
max Cont. Power (Drive)	●	736 W	4640 rpm	1.51 N.m