Product data sheet

Specifications

servo motor BMH, Lexium 32, 8.2Nm, 6000rpm, untapped shaft, without brake, IP54, 128bit encoder, straight

BMH1003T01A1A

Product availability: Non-Stock - Not normally stocked in distribution facility

Price*: 2,265.00 USD

Main

Product Or Component Type	Servo motor
Device Short Name	BMH
Maximum Mechanical Speed	6000 rpm
Continuous Stall Torque	72.58 lbf.in (8.2 N.m) LXM32.D30M2 10 A, 230 V, single phase
Peak Stall Torque	201.80 lbf.in (22.8 N.m) LXM32.D30M2 10 A, 230 V, single phase
Nominal Output Power	1450 W LXM32.D30M2 10 A, 230 V, single phase
Nominal Torque	49.56 lbf.in (5.6 N.m) LXM32.D30M2 10 A, 230 V, single phase
Nominal Speed	2500 rpm LXM32.D30M2 10 A, 230 V, single phase
Product Compatibility	LXM32.D30M2 230 V single phase
Shaft End	Smooth shaft
Ip Degree Of Protection	IP54 standard
Speed Feedback Resolution	131072 points/turn
Holding Brake	Without
Mounting Support	International standard flange
Electrical Connection	Straight connectors

Complementary

Range Compatibility	Lexium 32
[Us] Rated Supply Voltage	240 V
Phase	Three phase
Continuous Stall Current	10 A
Continuous Power	2.62 W
Maximum Current Irms	30 A LXM32.D30M2
Maximum Permanent Current	33.85 A
Second Shaft	Without second shaft end
Shaft Diameter	0.75 in (19 mm)
Shaft Length	1.57 in (40 mm)
Feedback Type	Single turn SinCos Hiperface
Motor Flange Size	3.94 in (100 mm)

Price is “List Price” and may be subject to a trade discount – check with your local distributor or retailer for actual price.

Disclaimer: This documentation is not intended as a substitute for and is not to be used for determining suitability or reliability of these products for specific user applications

Number Of Motor Stacks	3
Torque Constant	0.851 N.m/A 248 °F (120 °C)
Back Emf Constant	54.8 V/krpm 248 °F (120 °C)
Number Of Motor Poles	10
Rotor Inertia	9.37 kg.cm²
Stator Resistance	0.47 Ohm 68 °F (20 °C)
Stator Inductance	3 mH 68 °F (20 °C)
Stator Electrical Time Constant	6.4 ms 68 °F (20 °C)
Maximum Radial Force Fr	1050 N 1000 rpm 830 N 2000 rpm 730 N 3000 rpm 660 N 4000 rpm 610 N 5000 rpm
Maximum Axial Force Fa	0.2 x Fr
Type Of Cooling	Natural convection
Length	7.58 in (192.6 mm)
Centring Collar Diameter	3.74 in (95 mm)
Centring Collar Depth	0.14 in (3.5 mm)
Number Of Mounting Holes	4
Mounting Holes Diameter	0.35 in (9 mm)
Circle Diameter Of The Mounting Holes	4.53 in (115 mm)
Net Weight	14.33 lb(US) (6.5 kg)

Ordering and shipping details

Category	US1PC5318282
Discount Schedule	PC53
Gtin	3606485200965
Returnability	No
Country Of Origin	DE

Packing Units

Unit Type Of Package 1	PCE
Number Of Units In Package 1	1
Package 1 Height	8.66 in (22.0 cm)
Package 1 Width	7.87 in (20.0 cm)
Package 1 Length	15.75 in (40.0 cm)
Package 1 Weight	14.99 lb(US) (6.8 kg)

Contractual warranty

Warranty	18 months

Sustainability

Green Premium™ label is Schneider Electric's commitment to delivering products with best-in-class environmental performance. Green Premium promises compliance with the latest regulations, transparency on environmental impacts, as well as circular and low-CO_2 products.

Guide to assessing product sustainability is a white paper that clarifies global eco-label standards and how to interpret environmental declarations.

Learn more about Green Premium >

Guide to assess a product's sustainability >

Transparency RoHS/REACh

Well-being performance

- Mercury Free
- Rohs Exemption Information — Yes
- Pvc Free

Certifications & Standards

Reach Regulation	REACh Declaration
Eu Rohs Directive	Pro-active compliance (Product out of EU RoHS legal scope)
China Rohs Regulation	China RoHS declaration
Environmental Disclosure	Product Environmental Profile
Weee	The product must be disposed on European Union markets following specific waste collection and never end up in rubbish bins.
Circularity Profile	No need of specific recycling operations
California Proposition 65	WARNING: This product can expose you to chemicals including: Lead and lead compounds, which is known to the State of California to cause cancer and birth defects or other reproductive harm. For more information go to www.P65Warnings.ca.gov

Dimensions Drawings

Servo Motors Dimensions

Example with Straight Connectors

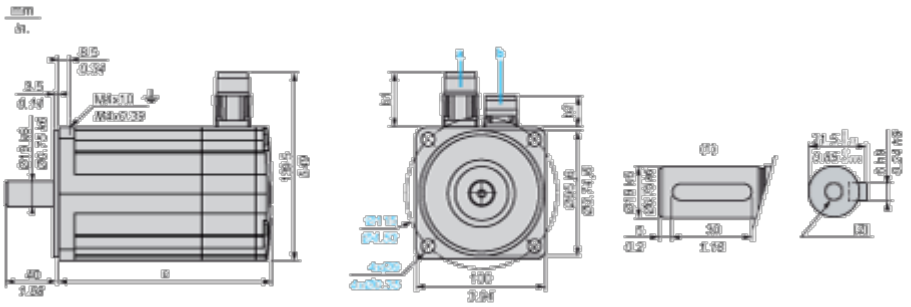

a: Power supply for servo motor brake

b: Power supply for servo motor encoder

(1) Shaft end, keyed slot (optional)

(2) For screw M6 x 21 mm/M6 x 0.83 in.

Dimensions in mm

Straight connectors		Rotatable angled connectors		c (without brake)	c (with brake)
b1	b2	b1	b2		
39.5	25.5	39.5	39.5	192	234

Dimensions in in.

Straight connectors		Rotatable angled connectors		c (without brake)	c (with brake)
b1	b2	b1	b2		
1.55	1.00	1.55	1.55	7.55	9.21

Performance Curves

230 V Single-Phase Supply Voltage

Torque/Speed Curves

Servo motor with LXM32•D30M2 servo drive

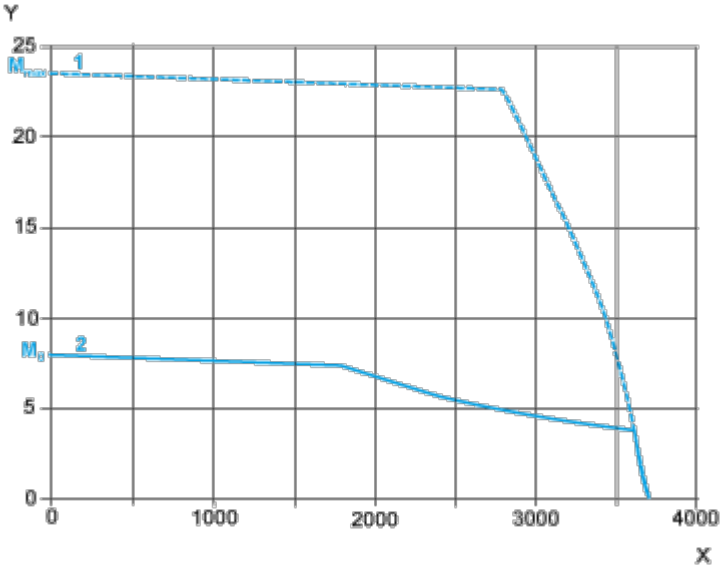

X Speed in rpm

Y Torque in Nm

1 Peak torque

2 Continuous torque