# Product data sheet

Specifications

## servo motor BMH, Lexium 32, 6.2Nm, 6000rpm, keyed shaft, without brake, IP65, IP67, 128 multiturn encoder

BMH1002P32A2A

**Product availability: Non-Stock - Not normally stocked in distribution facility**

**Price*: 1,745.00 USD**

## Main

| | |
|---|---|
| **Product Or Component Type** | Servo motor |
| **Device Short Name** | BMH |
| **Maximum Mechanical Speed** | 6000 rpm |
| **Continuous Stall Torque** | 54.87 lbf.in (6.2 N.m) LXM32.D18N4 6 A, 400 V, three phase<br>54.87 lbf.in (6.2 N.m) LXM32.D18N4 6 A, 480 V, three phase |
| **Peak Stall Torque** | 162.85 lbf.in (18.4 N.m) LXM32.D18N4 6 A, 400 V, three phase<br>162.85 lbf.in (18.4 N.m) LXM32.D18N4 6 A, 480 V, three phase |
| **Nominal Output Power** | 1600 W LXM32.D18N4 6 A, 400 V, three phase<br>1600 W LXM32.D18N4 6 A, 480 V, three phase |
| **Nominal Torque** | 34.52 lbf.in (3.9 N.m) LXM32.D18N4 6 A, 400 V, three phase<br>34.52 lbf.in (3.9 N.m) LXM32.D18N4 6 A, 480 V, three phase |
| **Nominal Speed** | 4000 rpm LXM32.D18N4 6 A, 400 V, three phase<br>4000 rpm LXM32.D18N4 6 A, 480 V, three phase |
| **Product Compatibility** | LXM32.D18N4 400...480 V three phase |
| **Shaft End** | Keyed |
| **Ip Degree Of Protection** | IP65 standard<br>IP67 with IP67 kit |
| **Speed Feedback Resolution** | 131072 points/turn x 4096 turns |
| **Holding Brake** | Without |
| **Mounting Support** | International standard flange |
| **Electrical Connection** | Rotatable right-angled connectors |

## Complementary

| | |
|---|---|
| **Range Compatibility** | Lexium 32 |
| **[Us] Rated Supply Voltage** | 480 V |
| **Phase** | Three phase |
| **Continuous Stall Current** | 5.04 A |
| **Continuous Power** | 2.36 W |
| **Maximum Current Irms** | 18 A LXM32.D18N4 |
| **Maximum Permanent Current** | 18.23 A |
| **Second Shaft** | Without second shaft end |
| **Shaft Diameter** | 0.75 in (19 mm) |

Price is “List Price” and may be subject to a trade discount – check with your local distributor or retailer for actual price.

Disclaimer: This documentation is not intended as a substitute for and is not to be used for determining suitability or reliability of these products for specific user applications

| | |
|---|---|
| **Shaft Length** | 1.57 in (40 mm) |
| **Key Width** | 1.18 in (30 mm) |
| **Feedback Type** | Multiturn SinCos Hiperface |
| **Motor Flange Size** | 3.94 in (100 mm) |
| **Number Of Motor Stacks** | 2 |
| **Torque Constant** | 1.2 N.m/A 248 °F (120 °C) |
| **Back Emf Constant** | 77 V/krpm 248 °F (120 °C) |
| **Number Of Motor Poles** | 10 |
| **Rotor Inertia** | 6.28 kg.cm² |
| **Stator Resistance** | 1.51 Ohm 68 °F (20 °C) |
| **Stator Inductance** | 7.5 mH 68 °F (20 °C) |
| **Stator Electrical Time Constant** | 5 ms 68 °F (20 °C) |
| **Maximum Radial Force Fr** | 990 N 1000 rpm<br>790 N 2000 rpm<br>690 N 3000 rpm<br>620 N 4000 rpm<br>580 N 5000 rpm |
| **Maximum Axial Force Fa** | 0.2 x Fr |
| **Type Of Cooling** | Natural convection |
| **Length** | 6.32 in (160.6 mm) |
| **Centring Collar Diameter** | 3.74 in (95 mm) |
| **Centring Collar Depth** | 0.14 in (3.5 mm) |
| **Number Of Mounting Holes** | 4 |
| **Mounting Holes Diameter** | 0.35 in (9 mm) |
| **Circle Diameter Of The Mounting Holes** | 4.53 in (115 mm) |
| **Net Weight** | 10.85 lb(US) (4.92 kg) |

## Ordering and shipping details

| | |
|---|---|
| **Category** | US1PC5318282 |
| **Discount Schedule** | PC53 |
| **Gtin** | 3606485195988 |
| **Returnability** | No |
| **Country Of Origin** | DE |

## Packing Units

| | |
|---|---|
| **Unit Type Of Package 1** | PCE |
| **Number Of Units In Package 1** | 1 |
| **Package 1 Height** | 8.66 in (22.0 cm) |
| **Package 1 Width** | 7.87 in (20.0 cm) |
| **Package 1 Length** | 15.75 in (40.0 cm) |
| **Package 1 Weight** | 11.51 lb(US) (5.22 kg) |

## Contractual warranty

| | |
|---|---|
| **Warranty** | 18 months |

## Sustainability

**Green Premium™ label** is Schneider Electric's commitment to delivering products with best-in-class environmental performance. Green Premium promises compliance with the latest regulations, transparency on environmental impacts, as well as circular and low-$CO_2$ products.

**Guide to assessing product sustainability** is a white paper that clarifies global eco-label standards and how to interpret environmental declarations.

Learn more about Green Premium >

Guide to assess a product's sustainability >

Transparency RoHS/REACh

## Well-being performance

| | |
|---|---|
| Mercury Free | |
| Rohs Exemption Information | Yes |
| Pvc Free | |

## Certifications & Standards

| | |
|---|---|
| **Reach Regulation** | REACh Declaration |
| **Eu Rohs Directive** | Pro-active compliance (Product out of EU RoHS legal scope) |
| **China Rohs Regulation** | China RoHS declaration |
| **Environmental Disclosure** | Product Environmental Profile |
| **Weee** | The product must be disposed on European Union markets following specific waste collection and never end up in rubbish bins. |
| **Circularity Profile** | No need of specific recycling operations |
| **California Proposition 65** | WARNING: This product can expose you to chemicals including: Lead and lead compounds, which is known to the State of California to cause cancer and birth defects or other reproductive harm. For more information go to www.P65Warnings.ca.gov |

## Dimensions Drawings

### Servo Motors Dimensions

#### Example with Straight Connectors

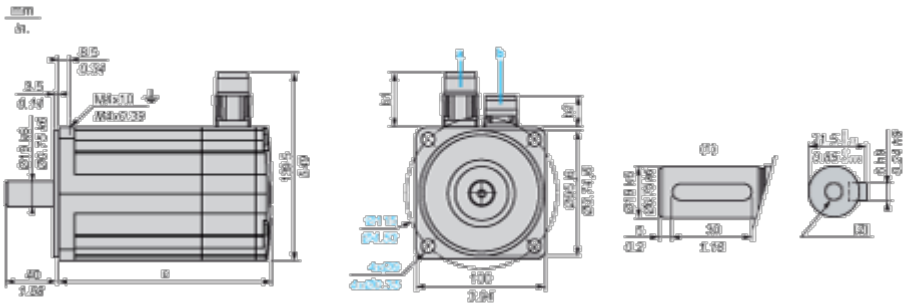

a: Power supply for servo motor brake

b: Power supply for servo motor encoder

(1) Shaft end, keyed slot (optional)

(2) For screw M6 x 21 mm/M6 x 0.83 in.

Dimensions in mm

| Straight connectors | | Rotatable angled connectors | | c (without brake) | c (with brake) |
|---|---|---|---|---|---|
| b1 | b2 | b1 | b2 | | |
| 39.5 | 25.5 | 39.5 | 39.5 | 160 | 202 |

Dimensions in in.

| Straight connectors | | Rotatable angled connectors | | c (without brake) | c (with brake) |
|---|---|---|---|---|---|
| b1 | b2 | b1 | b2 | | |
| 1.55 | 1.00 | 1.55 | 1.55 | 6.29 | 7.95 |

## Performance Curves

### 400 V 3-Phase Supply Voltage

#### Torque/Speed Curves

**Servo motor with LXM32•D18N4 servo drive**

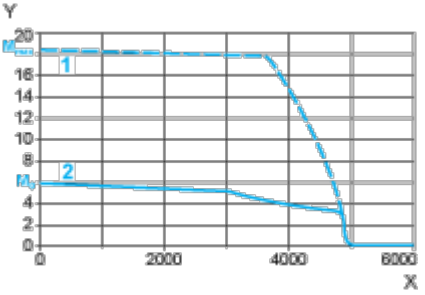


X Speed in rpm

Y Torque in Nm

1 Peak torque

2 Continuous torque

## 480 V 3-Phase Supply Voltage

### Torque/Speed Curves

**Servo motor with LXM32•D18N4 servo drive**

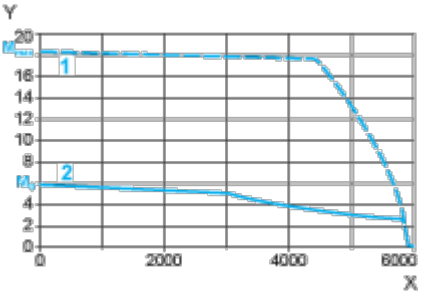


X Speed in rpm

Y Torque in Nm

1 Peak torque

2 Continuous torque