Product data sheet

Specifications

servo motor BMH, Lexium 32, 3.3Nm, 6000rpm, keyed shaft, with brake, IP54, 16bit encoder

BMH1001P16F2A

Product availability: Non-Stock - Not normally stocked in distribution facility

Price*: 1,300.00 USD

Main

Product Or Component Type	Servo motor
Device Short Name	BMH
Maximum Mechanical Speed	6000 rpm
Continuous Stall Torque	29.21 lbf.in (3.3 N.m) LXM32.D12N4 3 A, 400 V, three phase 29.21 lbf.in (3.3 N.m) LXM32.D12N4 3 A, 480 V, three phase 30.09 lbf.in (3.4 N.m) LXM32.D18N4 6 A, 400 V, three phase 30.09 lbf.in (3.4 N.m) LXM32.D18N4 6 A, 480 V, three phase
Peak Stall Torque	95.59 lbf.in (10.8 N.m) LXM32.D12N4 3 A, 400 V, three phase 95.59 lbf.in (10.8 N.m) LXM32.D12N4 3 A, 480 V, three phase 95.59 lbf.in (10.8 N.m) LXM32.D18N4 6 A, 400 V, three phase 95.59 lbf.in (10.8 N.m) LXM32.D18N4 6 A, 480 V, three phase
Nominal Output Power	800 W LXM32.D12N4 3 A, 400 V, three phase 800 W LXM32.D12N4 3 A, 480 V, three phase 1300 W LXM32.D18N4 6 A, 400 V, three phase 1300 W LXM32.D18N4 6 A, 480 V, three phase
Nominal Torque	16.82 lbf.in (1.9 N.m) LXM32.D12N4 3 A, 400 V, three phase 16.82 lbf.in (1.9 N.m) LXM32.D12N4 3 A, 480 V, three phase 27.44 lbf.in (3.1 N.m) LXM32.D18N4 6 A, 400 V, three phase 27.44 lbf.in (3.1 N.m) LXM32.D18N4 6 A, 480 V, three phase
Nominal Speed	4000 rpm LXM32.D12N4 3 A, 400 V, three phase 4000 rpm LXM32.D12N4 3 A, 480 V, three phase 4000 rpm LXM32.D18N4 6 A, 400 V, three phase 4000 rpm LXM32.D18N4 6 A, 480 V, three phase
Product Compatibility	LXM32.D12N4 400...480 V three phase LXM32.D18N4 400...480 V three phase
Shaft End	Keyed
Ip Degree Of Protection	IP54 standard
Speed Feedback Resolution	32768 points/turn
Holding Brake	With
Mounting Support	International standard flange
Electrical Connection	Rotatable right-angled connectors

Complementary

Range Compatibility	Lexium 32
[Us] Rated Supply Voltage	480 V
Phase	Three phase
Continuous Stall Current	3.15 A
Continuous Power	1.76 W

Price is “List Price” and may be subject to a trade discount – check with your local distributor or retailer for actual price.

Disclaimer: This documentation is not intended as a substitute for and is not to be used for determining suitability or reliability of these products for specific user applications

Maximum Current Irms	11.9 A LXM32.D12N4 11.9 A LXM32.D18N4
Maximum Permanent Current	11.93 A
Second Shaft	Without second shaft end
Shaft Diameter	0.75 in (19 mm)
Shaft Length	1.57 in (40 mm)
Key Width	1.18 in (30 mm)
Feedback Type	Single turn SinCos Hiperface
Holding Torque	48.68 lbf.in (5.5 N.m) holding brake
Motor Flange Size	3.94 in (100 mm)
Number Of Motor Stacks	1
Torque Constant	1.1 N.m/A 248 °F (120 °C)
Back Emf Constant	70.3 V/krpm 248 °F (120 °C)
Number Of Motor Poles	10
Rotor Inertia	3.68 kg.cm²
Stator Resistance	3.1 Ohm 68 °F (20 °C)
Stator Inductance	13.9 mH 68 °F (20 °C)
Stator Electrical Time Constant	4.5 ms 68 °F (20 °C)
Maximum Radial Force Fr	900 N 1000 rpm 720 N 2000 rpm 630 N 3000 rpm 570 N 4000 rpm 530 N 5000 rpm
Maximum Axial Force Fa	0.2 x Fr
Brake Pull-In Power	12 W
Type Of Cooling	Natural convection
Length	6.70 in (170.3 mm)
Centring Collar Diameter	3.74 in (95 mm)
Centring Collar Depth	0.14 in (3.5 mm)
Number Of Mounting Holes	4
Mounting Holes Diameter	0.35 in (9 mm)
Circle Diameter Of The Mounting Holes	4.53 in (115 mm)
Net Weight	10.58 lb(US) (4.8 kg)

Ordering and shipping details

Category	US1PC5318282
Discount Schedule	PC53
Gtin	3606485195681
Returnability	No
Country Of Origin	US

Packing Units

Unit Type Of Package 1	PCE

Number Of Units In Package 1	1
Package 1 Height	8.66 in (22.0 cm)
Package 1 Width	7.87 in (20.0 cm)
Package 1 Length	15.75 in (40.0 cm)
Package 1 Weight	11.24 lb(US) (5.1 kg)

Contractual warranty

Warranty	18 months

Sustainability

Green Premium™ label is Schneider Electric's commitment to delivering products with best-in-class environmental performance. Green Premium promises compliance with the latest regulations, transparency on environmental impacts, as well as circular and low-CO_2 products.

Guide to assessing product sustainability is a white paper that clarifies global eco-label standards and how to interpret environmental declarations.

Learn more about Green Premium >

Guide to assess a product's sustainability >

Transparency RoHS/REACh

Well-being performance

Mercury Free	
Rohs Exemption Information	Yes
Pvc Free	

Certifications & Standards

Reach Regulation	REACh Declaration
Eu Rohs Directive	Pro-active compliance (Product out of EU RoHS legal scope)
China Rohs Regulation	China RoHS declaration
Environmental Disclosure	Product Environmental Profile
Weee	The product must be disposed on European Union markets following specific waste collection and never end up in rubbish bins.
Circularity Profile	No need of specific recycling operations
California Proposition 65	WARNING: This product can expose you to chemicals including: Lead and lead compounds, which is known to the State of California to cause cancer and birth defects or other reproductive harm. For more information go to www.P65Warnings.ca.gov

Dimensions Drawings

Servo Motors Dimensions

Example with Straight Connectors

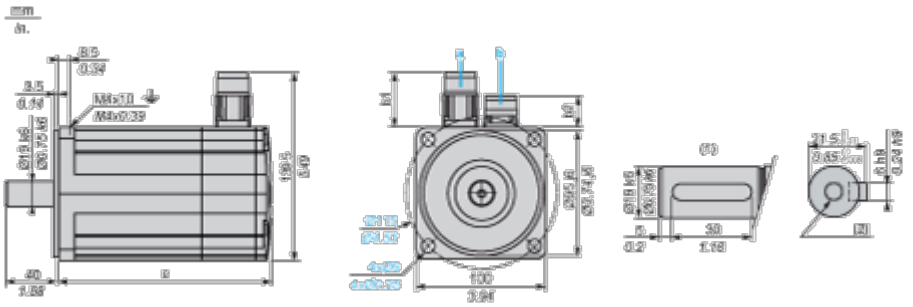

a: Power supply for servo motor brake

b: Power supply for servo motor encoder

(1) Shaft end, keyed slot (optional)

(2) For screw M6 x 21 mm/M6 x 0.83 in.

Dimensions in mm

Straight connectors		Rotatable angled connectors		c (without brake)	c (with brake)
b1	b2	b1	b2		
39.5	25.5	39.5	39.5	128	170

Dimensions in in.

Straight connectors		Rotatable angled connectors		c (without brake)	c (with brake)
b1	b2	b1	b2		
1.55	1.00	1.55	1.55	5.03	6.69

Performance Curves

400 V 3-Phase Supply Voltage

Torque/Speed Curves

Servo motor with LXM32•D12N4 servo drive

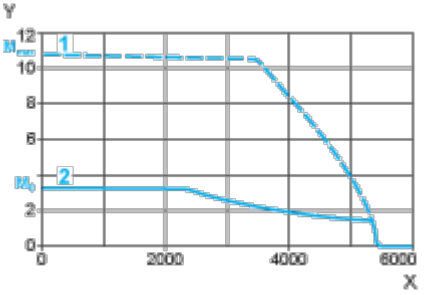

X Speed in rpm

Y Torque in Nm

1 Peak torque

2 Continuous torque

Servo motor with LXM32•D18N4 servo drive

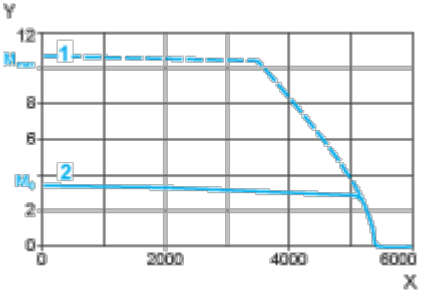

X Speed in rpm

Y Torque in Nm

1 Peak torque

2 Continuous torque

480 V 3-Phase Supply Voltage

Torque/Speed Curves

Servo motor with LXM32•D12N4 servo drive

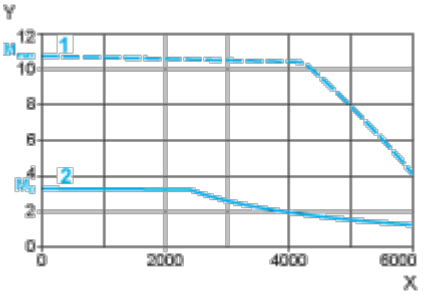

X Speed in rpm

Y Torque in Nm

1 Peak torque

2 Continuous torque

Servo motor with LXM32•D18N4 servo drive

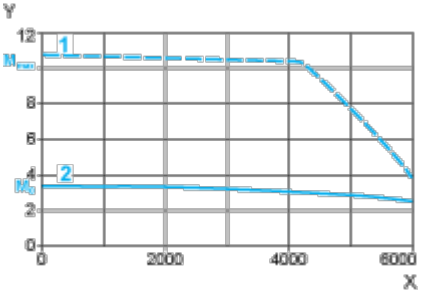

X Speed in rpm

Y Torque in Nm

1 Peak torque

2 Continuous torque