# Product data sheet

Specifications

## servo motor BMH, Lexium 32, 3.4Nm, 8000rpm, untapped shaft, with brake, IP65, IP67, 128bit encoder

BMH0703T21F2A

**Product availability: Non-Stock - Not normally stocked in distribution facility**

**Price*: 2,025.00 USD**

## Main

| | |
|---|---|
| **Product Or Component Type** | Servo motor |
| **Device Short Name** | BMH |
| **Maximum Mechanical Speed** | 8000 rpm |
| **Continuous Stall Torque** | 30.09 lbf.in (3.4 N.m) LXM32.D30M2 10 A, 115 V, single phase<br>30.09 lbf.in (3.4 N.m) LXM32.D18M2 6 A, 230 V, single phase |
| **Peak Stall Torque** | 77.00 lbf.in (8.7 N.m) LXM32.D30M2 10 A, 115 V, single phase<br>90.28 lbf.in (10.2 N.m) LXM32.D18M2 6 A, 230 V, single phase |
| **Nominal Output Power** | 650 W LXM32.D30M2 10 A, 115 V, single phase<br>900 W LXM32.D18M2 6 A, 230 V, single phase |
| **Nominal Torque** | 27.44 lbf.in (3.1 N.m) LXM32.D30M2 10 A, 115 V, single phase<br>25.67 lbf.in (2.9 N.m) LXM32.D18M2 6 A, 230 V, single phase |
| **Nominal Speed** | 2000 rpm LXM32.D30M2 10 A, 115 V, single phase<br>3000 rpm LXM32.D18M2 6 A, 230 V, single phase |
| **Product Compatibility** | LXM32.D30M2 115 V single phase<br>LXM32.D18M2 230 V single phase |
| **Shaft End** | Smooth shaft |
| **Ip Degree Of Protection** | IP65 standard<br>IP67 with IP67 kit |
| **Speed Feedback Resolution** | 131072 points/turn |
| **Holding Brake** | With |
| **Mounting Support** | International standard flange |
| **Electrical Connection** | Rotatable right-angled connectors |

## Complementary

| | |
|---|---|
| **Range Compatibility** | Lexium 32 |
| **[Us] Rated Supply Voltage** | 240 V |
| **Phase** | Three phase |
| **Continuous Stall Current** | 5.55 A |
| **Continuous Power** | 1.68 W |
| **Maximum Current Irms** | 15 A LXM32.D30M2<br>17.8 A LXM32.D18M2 |
| **Maximum Permanent Current** | 17.84 A |
| **Second Shaft** | Without second shaft end |

Price is “List Price” and may be subject to a trade discount – check with your local distributor or retailer for actual price.

Disclaimer: This documentation is not intended as a substitute for and is not to be used for determining suitability or reliability of these products for specific user applications

| | |
|---|---|
| **Shaft Diameter** | 0.55 in (14 mm) |
| **Shaft Length** | 1.18 in (30 mm) |
| **Feedback Type** | Single turn SinCos Hiperface |
| **Holding Torque** | 26.55 lbf.in (3 N.m) holding brake |
| **Motor Flange Size** | 2.76 in (70 mm) |
| **Number Of Motor Stacks** | 3 |
| **Torque Constant** | 0.61 N.m/A 248 °F (120 °C) |
| **Back Emf Constant** | 39.3 V/krpm 248 °F (120 °C) |
| **Number Of Motor Poles** | 10 |
| **Rotor Inertia** | 1.78 kg.cm² |
| **Stator Resistance** | 1.32 Ohm 68 °F (20 °C) |
| **Stator Inductance** | 4.3 mH 68 °F (20 °C) |
| **Stator Electrical Time Constant** | 3.3 ms 68 °F (20 °C) |
| **Maximum Radial Force Fr** | 730 N 1000 rpm<br>580 N 2000 rpm<br>510 N 3000 rpm<br>460 N 4000 rpm<br>430 N 5000 rpm<br>400 N 6000 rpm |
| **Maximum Axial Force Fa** | 0.2 x Fr |
| **Brake Pull-In Power** | 7 W |
| **Type Of Cooling** | Natural convection |
| **Length** | 8.86 in (225 mm) |
| **Centring Collar Diameter** | 2.36 in (60 mm) |
| **Centring Collar Depth** | 0.10 in (2.5 mm) |
| **Number Of Mounting Holes** | 4 |
| **Mounting Holes Diameter** | 0.22 in (5.5 mm) |
| **Circle Diameter Of The Mounting Holes** | 3.23 in (82 mm) |
| **Net Weight** | 8.82 lb(US) (4 kg) |

## Ordering and shipping details

| | |
|---|---|
| **Category** | US1PC5318282 |
| **Discount Schedule** | PC53 |
| **Gtin** | 3606485200132 |
| **Returnability** | No |
| **Country Of Origin** | DE |

## Packing Units

| | |
|---|---|
| **Unit Type Of Package 1** | PCE |
| **Number Of Units In Package 1** | 1 |
| **Package 1 Height** | 4.33 in (11.0 cm) |
| **Package 1 Width** | 7.87 in (20.0 cm) |
| **Package 1 Length** | 15.75 in (40.0 cm) |

| | |
|---|---|
| **Package 1 Weight** | 7.05 lb(US) (3.2 kg) |

## Contractual warranty

| | |
|---|---|
| **Warranty** | 18 months |

## Sustainability

**Green Premium™ label** is Schneider Electric's commitment to delivering products with best-in-class environmental performance. Green Premium promises compliance with the latest regulations, transparency on environmental impacts, as well as circular and low-$CO_2$ products.

**Guide to assessing product sustainability** is a white paper that clarifies global eco-label standards and how to interpret environmental declarations.

Learn more about Green Premium >

Guide to assess a product's sustainability >

Transparency RoHS/REACh

## Well-being performance

| | |
|---|---|
| Mercury Free | |
| Rohs Exemption Information | Yes |
| Pvc Free | |

## Certifications & Standards

| | |
|---|---|
| **Reach Regulation** | REACh Declaration |
| **Eu Rohs Directive** | Pro-active compliance (Product out of EU RoHS legal scope) |
| **China Rohs Regulation** | China RoHS declaration |
| **Environmental Disclosure** | Product Environmental Profile |
| **Weee** | The product must be disposed on European Union markets following specific waste collection and never end up in rubbish bins. |
| **Circularity Profile** | No need of specific recycling operations |
| **California Proposition 65** | WARNING: This product can expose you to chemicals including: Lead and lead compounds, which is known to the State of California to cause cancer and birth defects or other reproductive harm. For more information go to www.P65Warnings.ca.gov |

## Dimensions Drawings

### Servo Motors Dimensions

#### Example with Straight Connectors

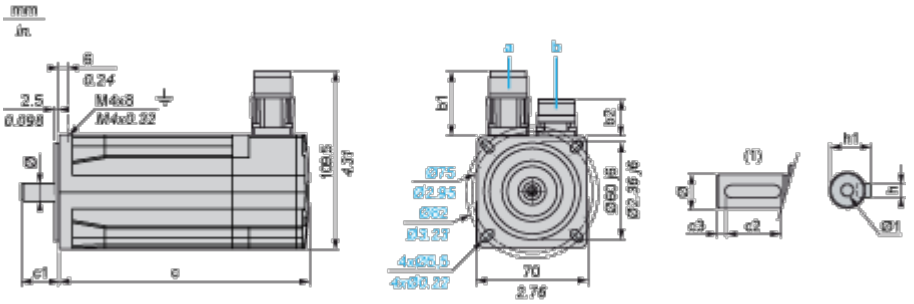


a: Power supply for servo motor brake

b: Power supply for servo motor encoder

(1) Shaft end, keyed slot (optional)

Dimensions in mm

| Straight connectors | | Rotatable angled connectors | | c (without brake) | c (with brake) | c1 | c2 | c3 | h | h1 | Ø | Ø1 for screws |
|---|---|---|---|---|---|---|---|---|---|---|---|---|
| b1 | b2 | b1 | b2 | | | | | | | | | |
| 39.5 | 25.5 | 39.5 | 39.5 | 186 | 225 | 30 | 20 | 5 | 5 h9 | $16^{+0}_{-0.13}$ | 14 k6 | M5 x 17 |

Dimensions in in.

| Straight connectors | | Rotatable angled connectors | | c (without brake) | c (with brake) | c1 | c2 | c3 | h | h1 | Ø | Ø1 for screws |
|---|---|---|---|---|---|---|---|---|---|---|---|---|
| b1 | b2 | b1 | b2 | | | | | | | | | |
| 1.55 | 1 | 1.55 | 1.55 | 7.32 | 8.85 | 1.18 | 0.78 | 0.19 | 0.20 h9 | $0.63^{+0}_{-0.0051}$ | 0.55 k6 | M5 x 0.67 |

## Performance Curves

### 115 V Single-Phase Supply Voltage

### Torque/Speed Curves

**Servo motor with LXM32•D30M2 servo drive**

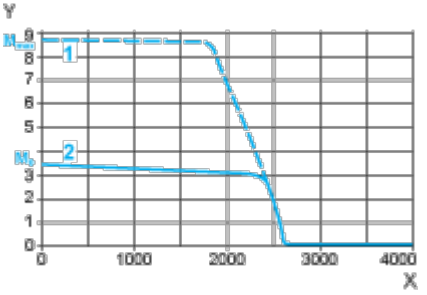


X Speed in rpm

Y Torque in Nm

1 Peak torque

2 Continuous torque

## 230 V Single-Phase Supply Voltage

### Torque/Speed Curves

**Servo motor with LXM32•D18M2 servo drive**

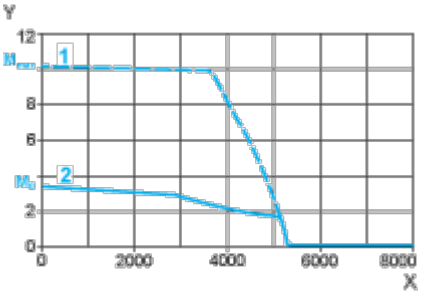


X Speed in rpm

Y Torque in Nm

1 Peak torque

2 Continuous torque