Product data sheet

Specifications

Green Premium™

Discontinued

servo motor BMH, Lexium 32, 2.5Nm, 8000rpm, keyed shaft, without brake, IP65, IP67, 128bit encoder, straight, 3 phases

BMH0702P31A1A

Discontinued on: Oct 9, 2023

Product availability: Non-Stock - Not normally stocked in distribution facility

Main

Product Or Component Type	Servo motor
Device Short Name	BMH
Maximum Mechanical Speed	8000 rpm
Continuous Stall Torque	22.13 lbf.in (2.5 N.m) LXM32.D12N4 3 A, 400 V, three phase 22.13 lbf.in (2.5 N.m) LXM32.D12N4 3 A, 480 V, three phase
Peak Stall Torque	65.50 lbf.in (7.4 N.m) LXM32.D12N4 3 A, 400 V, three phase 65.50 lbf.in (7.4 N.m) LXM32.D12N4 3 A, 480 V, three phase
Nominal Output Power	700 W LXM32.D12N4 3 A, 400 V, three phase 700 W LXM32.D12N4 3 A, 480 V, three phase
Nominal Torque	19.47 lbf.in (2.2 N.m) LXM32.D12N4 3 A, 400 V, three phase 19.47 lbf.in (2.2 N.m) LXM32.D12N4 3 A, 480 V, three phase
Nominal Speed	3000 rpm LXM32.D12N4 3 A, 400 V, three phase 3000 rpm LXM32.D12N4 3 A, 480 V, three phase
Product Compatibility	LXM32.D12N4 400...480 V three phase
Shaft End	Keyed
Ip Degree Of Protection	IP65 standard IP67 with IP67 kit
Speed Feedback Resolution	131072 points/turn
Holding Brake	Without
Mounting Support	International standard flange
Electrical Connection	Straight connectors

Complementary

Range Compatibility	Lexium 32
[Us] Rated Supply Voltage	480 V
Phase	Three phase
Continuous Stall Current	2.94 A
Continuous Power	1.51 W
Maximum Current Irms	9.7 A LXM32.D12N4
Maximum Permanent Current	9.68 A
Second Shaft	Without second shaft end

Price is “List Price” and may be subject to a trade discount – check with your local distributor or retailer for actual price.

Disclaimer: This documentation is not intended as a substitute for and is not to be used for determining suitability or reliability of these products for specific user applications

Shaft Diameter	0.43 in (11 mm)
Shaft Length	0.91 in (23 mm)
Key Width	0.71 in (18 mm)
Feedback Type	Single turn SinCos Hiperface
Motor Flange Size	2.76 in (70 mm)
Number Of Motor Stacks	2
Torque Constant	0.84 N.m/A 248 °F (120 °C)
Back Emf Constant	54.08 V/krpm 248 °F (120 °C)
Number Of Motor Poles	10
Rotor Inertia	1.13 kg.cm²
Stator Resistance	3.8 Ohm 68 °F (20 °C)
Stator Inductance	12.2 mH 68 °F (20 °C)
Stator Electrical Time Constant	3.2 ms 68 °F (20 °C)
Maximum Radial Force Fr	710 N 1000 rpm 560 N 2000 rpm 490 N 3000 rpm 450 N 4000 rpm 410 N 5000 rpm 390 N 6000 rpm
Maximum Axial Force Fa	0.2 x Fr
Type Of Cooling	Natural convection
Length	6.06 in (154 mm)
Centring Collar Diameter	2.36 in (60 mm)
Centring Collar Depth	0.10 in (2.5 mm)
Number Of Mounting Holes	4
Mounting Holes Diameter	0.22 in (5.5 mm)
Circle Diameter Of The Mounting Holes	3.23 in (82 mm)
Net Weight	5.07 lb(US) (2.3 kg)

Ordering and shipping details

Category	US1PC5318282
Discount Schedule	PC53
Gtin	3606485198903
Returnability	No
Country Of Origin	DE

Packing Units

Unit Type Of Package 1	PCE
Number Of Units In Package 1	1
Package 1 Height	4.33 in (11.0 cm)
Package 1 Width	7.87 in (20.0 cm)
Package 1 Length	15.75 in (40.0 cm)
Package 1 Weight	4.41 lb(US) (2.0 kg)

Contractual warranty

Warranty	18 months

Sustainability

Green Premium™ label is Schneider Electric's commitment to delivering products with best-in-class environmental performance. Green Premium promises compliance with the latest regulations, transparency on environmental impacts, as well as circular and low-CO_2 products.

Guide to assessing product sustainability is a white paper that clarifies global eco-label standards and how to interpret environmental declarations.

Learn more about Green Premium >

Guide to assess a product's sustainability >

Transparency RoHS/REACh

Well-being performance

Mercury Free	
Rohs Exemption Information	Yes
Pvc Free	

Certifications & Standards

Reach Regulation	REACh Declaration
Eu Rohs Directive	Pro-active compliance (Product out of EU RoHS legal scope)
China Rohs Regulation	China RoHS declaration
Environmental Disclosure	Product Environmental Profile
Weee	The product must be disposed on European Union markets following specific waste collection and never end up in rubbish bins.
Circularity Profile	No need of specific recycling operations
California Proposition 65	WARNING: This product can expose you to chemicals including: Lead and lead compounds, which is known to the State of California to cause cancer and birth defects or other reproductive harm. For more information go to www.P65Warnings.ca.gov

Dimensions Drawings

Servo Motors Dimensions

Example with Straight Connectors

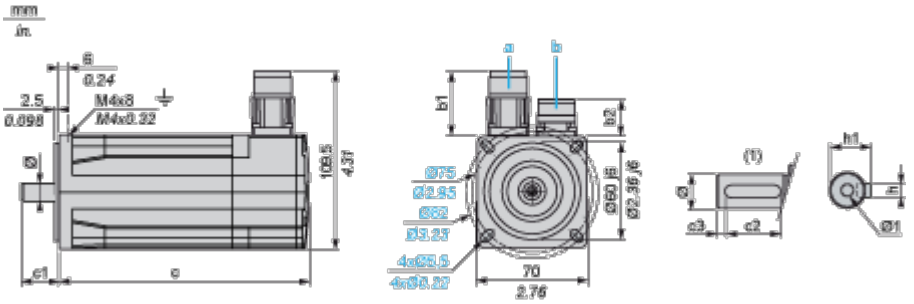

a: Power supply for servo motor brake

b: Power supply for servo motor encoder

(1) Shaft end, keyed slot (optional)

Dimensions in mm

Straight connectors		Rotatable angled connectors		c (without brake)	c (with brake)	c1	c2	c3	h	h1	Ø	Ø1 for screws
b1	b2	b1	b2									
39.5	25.5	39.5	39.5	154	193	23	18	2.5	4 h9	$12.5^{+0}_{-0.13}$	11 k6	M4 x 14

Dimensions in in.

Straight connectors		Rotatable angled connectors		c (without brake)	c (with brake)	c1	c2	c3	h	h1	Ø	Ø1 for screws
b1	b2	b1	b2									
1.55	1	1.55	1.55	6.06	7.59	0.90	0.70	0.09	0.16 h9	$0.49^{+0}_{-0.0051}$	0.43 k6	M4 x 0.55

Performance Curves

400 V 3-Phase Supply Voltage

Torque/Speed Curves

Servo motor with LXM32•D12N4 servo drive

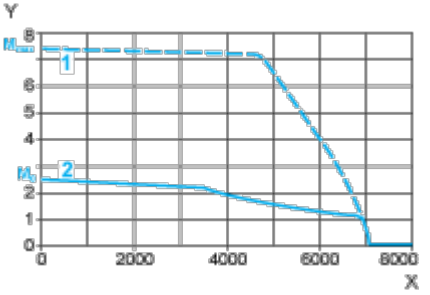

X Speed in rpm

Y Torque in Nm

1 Peak torque

2 Continuous torque

480 V 3-Phase Supply Voltage

Torque/Speed Curves

Servo motor with LXM32•D12N4 servo drive

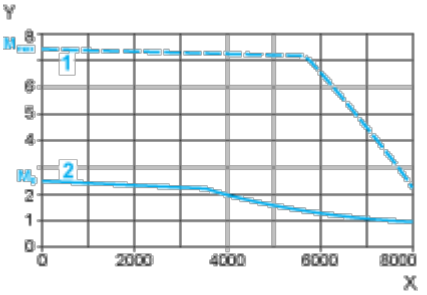

X Speed in rpm

Y Torque in Nm

1 Peak torque

2 Continuous torque