# Product data sheet

Specifications

## servo motor BMH, Lexium 32, 1.4Nm, 8000rpm, keyed shaft, with brake, IP65, IP67, 16 multiturn encoder

BMH0701T37F2A

**Product availability: Non-Stock - Not normally stocked in distribution facility**

**Price*: 2,047.50 USD**

## Main

| | |
|---|---|
| **Product Or Component Type** | Servo motor |
| **Device Short Name** | BMH |
| **Maximum Mechanical Speed** | 8000 rpm |
| **Continuous Stall Torque** | 12.39 lbf.in (1.4 N.m) LXM32.U90M2 3 A, 230 V, single phase<br>12.39 lbf.in (1.4 N.m) LXM32.D18M2 6 A, 115 V, single phase |
| **Peak Stall Torque** | 35.40 lbf.in (4 N.m) LXM32.U90M2 3 A, 230 V, single phase<br>37.17 lbf.in (4.2 N.m) LXM32.D18M2 6 A, 115 V, single phase |
| **Nominal Output Power** | 450 W LXM32.U90M2 3 A, 230 V, single phase<br>350 W LXM32.D18M2 6 A, 115 V, single phase |
| **Nominal Torque** | 9.74 lbf.in (1.1 N.m) LXM32.U90M2 3 A, 230 V, single phase<br>11.95 lbf.in (1.35 N.m) LXM32.D18M2 6 A, 115 V, single phase |
| **Nominal Speed** | 4000 rpm LXM32.U90M2 3 A, 230 V, single phase<br>2500 rpm LXM32.D18M2 6 A, 115 V, single phase |
| **Product Compatibility** | LXM32.D18M2 115 V single phase<br>LXM32.U90M2 230 V single phase |
| **Shaft End** | Keyed |
| **Ip Degree Of Protection** | IP65 standard<br>IP67 with IP67 kit |
| **Speed Feedback Resolution** | 32768 points/turn x 4096 turns |
| **Holding Brake** | With |
| **Mounting Support** | International standard flange |
| **Electrical Connection** | Rotatable right-angled connectors |

## Complementary

| | |
|---|---|
| **Range Compatibility** | Lexium 32 |
| **[Us] Rated Supply Voltage** | 240 V |
| **Phase** | Three phase |
| **Continuous Stall Current** | 2.85 A |
| **Continuous Power** | 1.05 W |
| **Maximum Current Irms** | 9.6 A LXM32.D18M2<br>9.6 A LXM32.U90M2 |
| **Maximum Permanent Current** | 9.56 A |
| **Second Shaft** | Without second shaft end |

Price is “List Price” and may be subject to a trade discount – check with your local distributor or retailer for actual price.

Disclaimer: This documentation is not intended as a substitute for and is not to be used for determining suitability or reliability of these products for specific user applications

| | |
|---|---|
| **Shaft Diameter** | 0.43 in (11 mm) |
| **Shaft Length** | 0.91 in (23 mm) |
| **Key Width** | 0.71 in (18 mm) |
| **Feedback Type** | Multiturn SinCos Hiperface |
| **Holding Torque** | 26.55 lbf.in (3 N.m) holding brake |
| **Motor Flange Size** | 2.76 in (70 mm) |
| **Number Of Motor Stacks** | 1 |
| **Torque Constant** | 0.49 N.m/A 248 °F (120 °C) |
| **Back Emf Constant** | 31.17 V/krpm 248 °F (120 °C) |
| **Number Of Motor Poles** | 10 |
| **Rotor Inertia** | 0.7 kg.cm² |
| **Stator Resistance** | 3.2 Ohm 68 °F (20 °C) |
| **Stator Inductance** | 9.1 mH 68 °F (20 °C) |
| **Stator Electrical Time Constant** | 2.8 ms 68 °F (20 °C) |
| **Maximum Radial Force Fr** | 660 N 1000 rpm<br>520 N 2000 rpm<br>460 N 3000 rpm<br>410 N 4000 rpm<br>380 N 5000 rpm<br>360 N 6000 rpm |
| **Maximum Axial Force Fa** | 0.2 x Fr |
| **Brake Pull-In Power** | 7 W |
| **Type Of Cooling** | Natural convection |
| **Length** | 6.34 in (161 mm) |
| **Centring Collar Diameter** | 2.36 in (60 mm) |
| **Centring Collar Depth** | 0.10 in (2.5 mm) |
| **Number Of Mounting Holes** | 4 |
| **Mounting Holes Diameter** | 0.22 in (5.5 mm) |
| **Circle Diameter Of The Mounting Holes** | 3.23 in (82 mm) |
| **Net Weight** | 5.73 lb(US) (2.6 kg) |

## Ordering and shipping details

| | |
|---|---|
| **Category** | US1PC5318282 |
| **Discount Schedule** | PC53 |
| **Gtin** | 3606485194455 |
| **Returnability** | No |
| **Country Of Origin** | DE |

## Packing Units

| | |
|---|---|
| **Unit Type Of Package 1** | PCE |
| **Number Of Units In Package 1** | 1 |
| **Package 1 Height** | 4.33 in (11.0 cm) |
| **Package 1 Width** | 7.87 in (20.0 cm) |

| | |
|---|---|
| **Package 1 Length** | 15.75 in (40.0 cm) |
| **Package 1 Weight** | 6.17 lb(US) (2.8 kg) |

## Contractual warranty

| | |
|---|---|
| **Warranty** | 18 months |

## Sustainability

**Green Premium™ label** is Schneider Electric's commitment to delivering products with best-in-class environmental performance. Green Premium promises compliance with the latest regulations, transparency on environmental impacts, as well as circular and low-$CO_2$ products.

**Guide to assessing product sustainability** is a white paper that clarifies global eco-label standards and how to interpret environmental declarations.

Learn more about Green Premium >

Guide to assess a product's sustainability >

Transparency RoHS/REACh

## Well-being performance

| | |
|---|---|
| Mercury Free | |
| Rohs Exemption Information | Yes |
| Pvc Free | |

## Certifications & Standards

| | |
|---|---|
| **Reach Regulation** | REACh Declaration |
| **Eu Rohs Directive** | Pro-active compliance (Product out of EU RoHS legal scope) |
| **China Rohs Regulation** | China RoHS declaration |
| **Environmental Disclosure** | Product Environmental Profile |
| **Weee** | The product must be disposed on European Union markets following specific waste collection and never end up in rubbish bins. |
| **Circularity Profile** | No need of specific recycling operations |
| **California Proposition 65** | WARNING: This product can expose you to chemicals including: Lead and lead compounds, which is known to the State of California to cause cancer and birth defects or other reproductive harm. For more information go to www.P65Warnings.ca.gov |

## Dimensions Drawings

### Servo Motors Dimensions

#### Example with Straight Connectors

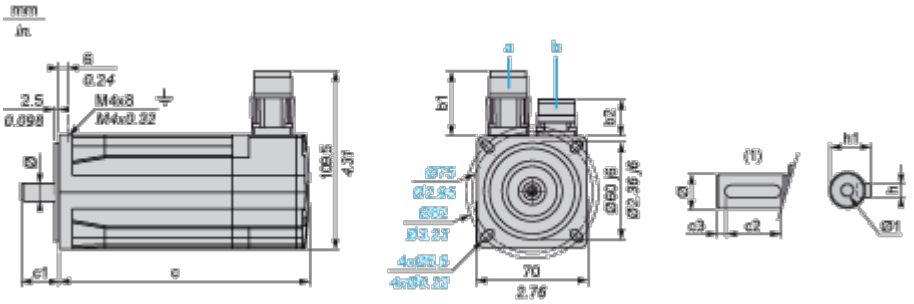


a: Power supply for servo motor brake

b: Power supply for servo motor encoder

(1) Shaft end, keyed slot (optional)

Dimensions in mm

| Straight connectors | | Rotatable angled connectors | | c (without brake) | c (with brake) | c1 | c2 | c3 | h | h1 | Ø | Ø1 for screws |
|---|---|---|---|---|---|---|---|---|---|---|---|---|
| b1 | b2 | b1 | b2 | | | | | | | | | |
| 39.5 | 25.5 | 39.5 | 39.5 | 122 | 161 | 23 | 18 | 2.5 | 4 h9 | $12.5^{+0}_{-0.13}$ | 11 k6 | M4 x 14 |

Dimensions in in.

| Straight connectors | | Rotatable angled connectors | | c (without brake) | c (with brake) | c1 | c2 | c3 | h | h1 | Ø | Ø1 for screws |
|---|---|---|---|---|---|---|---|---|---|---|---|---|
| b1 | b2 | b1 | b2 | | | | | | | | | |
| 1.55 | 1 | 1.55 | 1.55 | 4.80 | 6.33 | 0.90 | 0.70 | 0.09 | 0.16 h9 | $0.49^{+0}_{-0.0051}$ | 0.43 k6 | M4 x 0.55 |

## Performance Curves

### 115 V Single-Phase Supply Voltage

### Torque/Speed Curves

**Servo motor with LXM32•D18M2 servo drive**

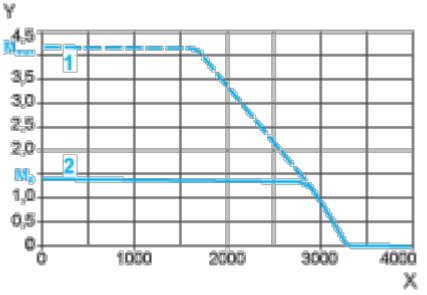


X Speed in rpm

Y Torque in Nm

1 Peak torque

2 Continuous torque

## 230 V Single-Phase Supply Voltage

### Torque/Speed Curves

**Servo motor with LXM32•U90M2 servo drive**

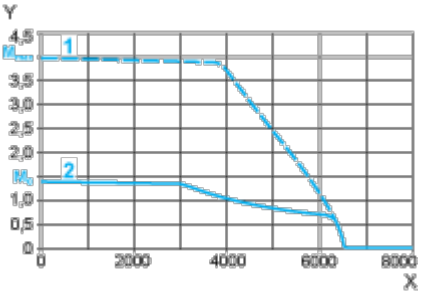


X Speed in rpm

Y Torque in Nm

1 Peak torque

2 Continuous torque