Product data sheet

Specifications

servo motor BCH, Lexium 28, 180mm, 4500W, 74kg.cm², with oil seal, smooth, brake, straight connection

BCH2MR4512CF6C

Product availability: Non-Stock - Not normally stocked in distribution facility

Price*: 6,114.15 USD

Main

Range Compatibility	Lexium 28
Product Or Component Type	Servo motor
Device Short Name	BCH2

Complementary

Maximum Mechanical Speed	3000 rpm
[Us] Rated Supply Voltage	220 V
Phase	Three phase
Continuous Stall Current	19.68 A
Continuous Stall Torque	253.57 lbf.in (28.65 N.m) LXM28... 22.9 A, 220 V, three phase
Continuous Power	4500 W
Peak Stall Torque	633.89 lbf.in (71.62 N.m) LXM28... 22.9 A, 220 V, three phase
Nominal Output Power	4500 W LXM28... 22.9 A, 220 V, three phase
Nominal Torque	253.57 lbf.in (28.65 N.m) LXM28... 22.9 A, 220 V, three phase
Nominal Speed	1500 rpm LXM28... 22.9 A, 220 V, three phase
Maximum Current Irms	57.6 A LXM28... 4.5 kW, 220 V
Maximum Permanent Current	22.8 A
Product Compatibility	LXM28... servo drive 4.5 kW, 220 V, three phase
Shaft End	Smooth shaft
Shaft Diameter	1.38 in (35 mm)
Shaft Length	3.11 in (79 mm)
Feedback Type	20 bits single turn absolute encoder
Holding Brake	With
Holding Torque	424.84 lbf.in (48 N.m) built-in
Mounting Support	Asian standard flange
Motor Flange Size	7.09 in (180 mm)
Electrical Connection	Connector MIL
Torque Constant	1.46 N.m/A 68 °F (20 °C)
Back Emf Constant	88 V/krpm 68 °F (20 °C)

Price is “List Price” and may be subject to a trade discount – check with your local distributor or retailer for actual price.

Disclaimer: This documentation is not intended as a substitute for and is not to be used for determining suitability or reliability of these products for specific user applications

Rotor Inertia	74 kg.cm²
Stator Resistance	0.199 Ohm 68 °F (20 °C)
Stator Inductance	3.8 mH 68 °F (20 °C)
Stator Electrical Time Constant	19.1 ms 68 °F (20 °C)
Maximum Radial Force Fr	1200 N 1500 rpm
Maximum Axial Force Fa	497 N
Brake Pull-In Power	49.6 W
Type Of Cooling	Natural convection
Length	10.98 in (279 mm)
Number Of Motor Stacks	3
Centring Collar Diameter	4.50 in (114.3 mm)
Centring Collar Depth	0.16 in (4 mm)
Number Of Mounting Holes	4
Mounting Holes Diameter	0.53 in (13.5 mm)
Circle Diameter Of The Mounting Holes	7.87 in (200 mm)
Distance Shaft Shoulder-Flange	0.16 in (4 mm)
Net Weight	61.73 lb(US) (28 kg)

Environment

Ip Degree Of Protection	IP50 IM V3 IP65 IM B5, IM V1
Ambient Air Temperature For Operation	32…104 °F (0…40 °C)

Ordering and shipping details

Category	US1PC5318281
Discount Schedule	PC53
Gtin	3606480735059
Returnability	No
Country Of Origin	CN

Packing Units

Unit Type Of Package 1	PCE
Number Of Units In Package 1	1
Package 1 Height	9.65 in (24.5 cm)
Package 1 Width	11.42 in (29.0 cm)
Package 1 Length	23.03 in (58.5 cm)
Package 1 Weight	65.32 lb(US) (29.63 kg)

Sustainability

Green Premium™ label is Schneider Electric's commitment to delivering products with best-in-class environmental performance. Green Premium promises compliance with the latest regulations, transparency on environmental impacts, as well as circular and low-CO_2 products.

Guide to assessing product sustainability is a white paper that clarifies global eco-label standards and how to interpret environmental declarations.

Learn more about Green Premium >

Guide to assess a product's sustainability >

Transparency RoHS/REACh

Well-being performance

Reach Free Of Svhc	
Mercury Free	
Rohs Exemption Information	Yes
Pvc Free	

Certifications & Standards

Reach Regulation	REACh Declaration
Eu Rohs Directive	Pro-active compliance (Product out of EU RoHS legal scope)
China Rohs Regulation	China RoHS declaration
Environmental Disclosure	Product Environmental Profile
Weee	The product must be disposed on European Union markets following specific waste collection and never end up in rubbish bins.
Circularity Profile	End of Life Information
California Proposition 65	WARNING: This product can expose you to chemicals including: Lead and lead compounds, which is known to the State of California to cause cancer and birth defects or other reproductive harm. For more information go to www.P65Warnings.ca.gov

Dimensions Drawings

Dimensions

Dimensions of Motor

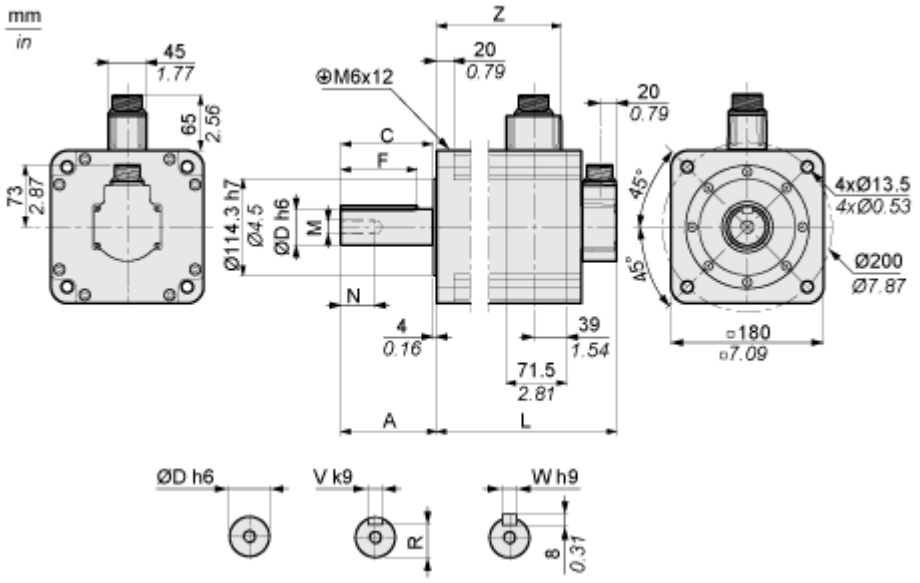

	mm	in.
L (without holding brake)	235	9.25
L (with holding brake)	279	10.98
A	79	3.11
C	73	2.87
D	35	1.38
F	63	2.48
N	28	1.10
M	M12	
R	30	1.18
V	10	0.39
W	10	0.39
Z	169	6.65

Performance Curves

Torque/Speed Curves with 230 V Three Phase Supply Voltage

Servo Motor with LXM28AU45••• Servo Drive

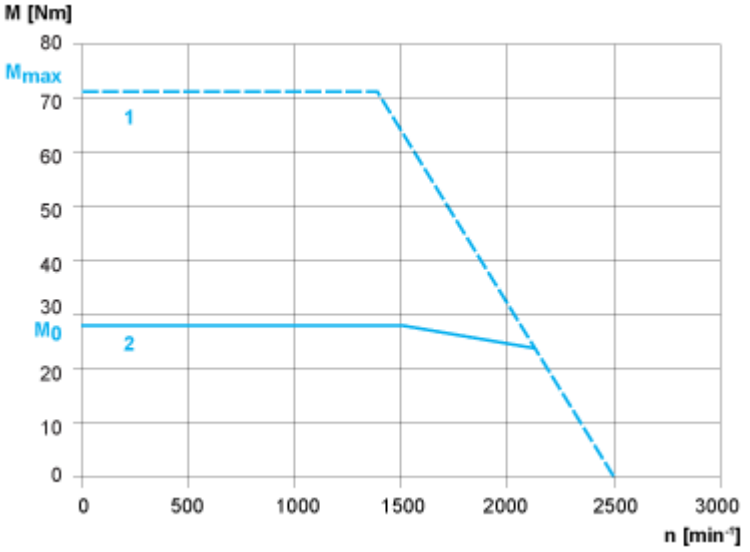

1 : Peak torque

2 : Continuous torque