# Product data sheet

Specifications

Green Premium™

## servo motor BCH, Lexium 28, 130mm, 1500W, 9.7kg.cm², without oil seal, with key, straight connection

BCH2MM1521CA6C

Discontinued

Discontinued on: Oct 9, 2023

**Product availability: Non-Stock - Not normally stocked in distribution facility**

## Main

| | |
|---|---|
| **Range Compatibility** | Lexium 28 |
| **Product Or Component Type** | Servo motor |
| **Device Short Name** | BCH2 |

## Complementary

| | |
|---|---|
| **Maximum Mechanical Speed** | 3000 rpm |
| **[Us] Rated Supply Voltage** | 220 V |
| **Phase** | Three phase<br>Single phase |
| **Continuous Stall Current** | 6.18 A |
| **Continuous Stall Torque** | 63.37 lbf.in (7.16 N.m) LXM28... 7 A, 220 V, single phase<br>63.37 lbf.in (7.16 N.m) LXM28... 7 A, 220 V, three phase |
| **Continuous Power** | 1500 W |
| **Peak Stall Torque** | 190.11 lbf.in (21.48 N.m) LXM28... 7 A, 220 V, single phase<br>190.11 lbf.in (21.48 N.m) LXM28... 7 A, 220 V, three phase |
| **Nominal Output Power** | 1500 W LXM28... 7 A, 220 V, single phase<br>1500 W LXM28... 7 A, 220 V, three phase |
| **Nominal Torque** | 63.37 lbf.in (7.16 N.m) LXM28... 7 A, 220 V, single phase<br>63.37 lbf.in (7.16 N.m) LXM28... 7 A, 220 V, three phase |
| **Nominal Speed** | 2000 rpm LXM28... 7 A, 220 V, single phase<br>2000 rpm LXM28... 7 A, 220 V, three phase |
| **Maximum Current Irms** | 20.31 A LXM28... 1.5 kW, 220 V |
| **Maximum Permanent Current** | 6.74 A |
| **Product Compatibility** | LXM28... servo drive 1.5 kW, 220 V, single phase<br>LXM28... servo drive 1.5 kW, 220 V, three phase |
| **Shaft End** | Keyed |
| **Shaft Diameter** | 0.87 in (22 mm) |
| **Shaft Length** | 2.17 in (55 mm) |
| **Key Width** | 0.31 in (8 mm) |
| **Feedback Type** | 20 bits single turn absolute encoder |
| **Holding Brake** | Without |
| **Mounting Support** | Asian standard flange |

Price is “List Price” and may be subject to a trade discount – check with your local distributor or retailer for actual price.

Disclaimer: This documentation is not intended as a substitute for and is not to be used for determining suitability or reliability of these products for specific user applications

| | |
|---|---|
| **Motor Flange Size** | 5.12 in (130 mm) |
| **Electrical Connection** | Connector MIL |
| **Torque Constant** | 1.16 N.m/A 68 °F (20 °C) |
| **Back Emf Constant** | 70 V/krpm 68 °F (20 °C) |
| **Rotor Inertia** | 9.7 kg.cm² |
| **Stator Resistance** | 0.64 Ohm 68 °F (20 °C) |
| **Stator Inductance** | 6.4 mH 68 °F (20 °C) |
| **Stator Electrical Time Constant** | 10 ms 68 °F (20 °C) |
| **Maximum Radial Force Fr** | 670 N 2000 rpm |
| **Maximum Axial Force Fa** | 200 N |
| **Brake Pull-In Power** | 19.7 W |
| **Type Of Cooling** | Natural convection |
| **Length** | 6.57 in (167 mm) |
| **Number Of Motor Stacks** | 3 |
| **Centring Collar Diameter** | 4.33 in (110 mm) |
| **Centring Collar Depth** | 0.31 in (8 mm) |
| **Number Of Mounting Holes** | 4 |
| **Mounting Holes Diameter** | 0.36 in (9.2 mm) |
| **Circle Diameter Of The Mounting Holes** | 5.71 in (145 mm) |
| **Distance Shaft Shoulder-Flange** | 0.31 in (8 mm) |
| **Net Weight** | 16.76 lb(US) (7.6 kg) |

## Environment

| | |
|---|---|
| **Ip Degree Of Protection** | IP54 IM B5, IM V1<br>IP50 IM V3 |
| **Ambient Air Temperature For Operation** | -4…104 °F (-20…40 °C) |

## Ordering and shipping details

| | |
|---|---|
| **Category** | US1PC5318281 |
| **Discount Schedule** | PC53 |
| **Gtin** | 3606480734304 |
| **Returnability** | No |
| **Country Of Origin** | CN |

## Packing Units

| | |
|---|---|
| **Unit Type Of Package 1** | PCE |
| **Number Of Units In Package 1** | 1 |
| **Package 1 Height** | 7.13 in (18.1 cm) |
| **Package 1 Width** | 9.06 in (23 cm) |
| **Package 1 Length** | 14.17 in (36 cm) |
| **Package 1 Weight** | 301.59 oz (8550 g) |

## Sustainability

**Green Premium™ label** is Schneider Electric's commitment to delivering products with best-in-class environmental performance. Green Premium promises compliance with the latest regulations, transparency on environmental impacts, as well as circular and low-$CO_2$ products.

**Guide to assessing product sustainability** is a white paper that clarifies global eco-label standards and how to interpret environmental declarations.

Learn more about Green Premium >

Guide to assess a product's sustainability >

Transparency RoHS/REACh

## Well-being performance

| | |
|---|---|
| Reach Free Of Svhc | |
| Mercury Free | |
| Rohs Exemption Information | Yes |
| Pvc Free | |

## Certifications & Standards

| | |
|---|---|
| **Reach Regulation** | REACh Declaration |
| **Eu Rohs Directive** | Pro-active compliance (Product out of EU RoHS legal scope) |
| **China Rohs Regulation** | China RoHS declaration |
| **Environmental Disclosure** | Product Environmental Profile |
| **Weee** | The product must be disposed on European Union markets following specific waste collection and never end up in rubbish bins. |
| **Circularity Profile** | End of Life Information |
| **California Proposition 65** | WARNING: This product can expose you to chemicals including: Lead and lead compounds, which is known to the State of California to cause cancer and birth defects or other reproductive harm. For more information go to www.P65Warnings.ca.gov |

## Dimensions Drawings

### Dimensions

#### Dimensions of Motor

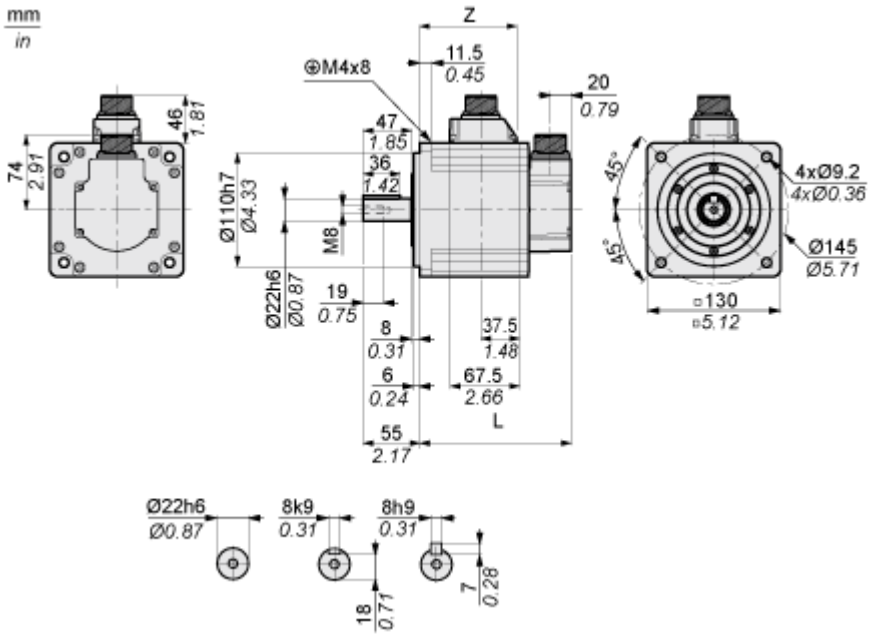


| | mm | in. |
|---|---|---|
| L (without holding brake) | 167 | 6.57 |
| L (with holding brake) | 202 | 7.95 |
| Z | 114.5 | 4.51 |

## Performance Curves

### Torque/Speed Curves with 230 V Single/Three Phase Supply Voltage

**Servo Motor with LXM28AU15••• Servo Drive**

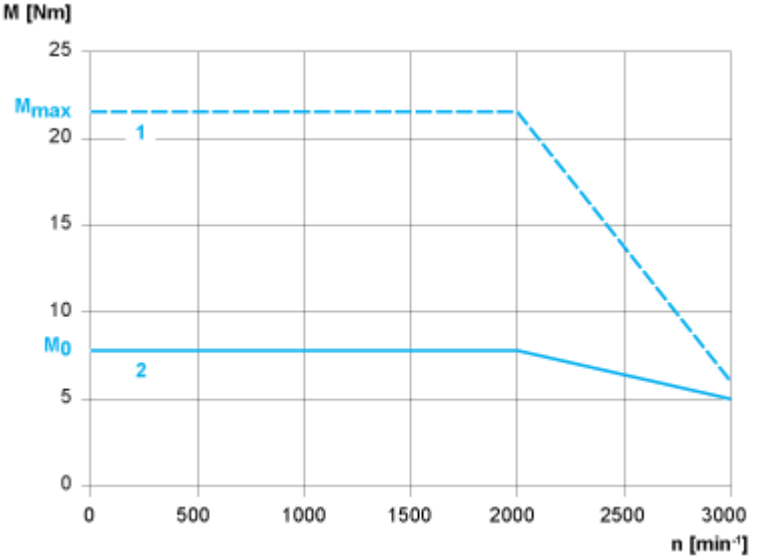


1 : Peak torque

2 : Continuous torque