Product data sheet

Specifications

servo motor BCH, Lexium 28, 80mm, 400W, with oil seal, smooth, brake, leads connection

BCH2LF0432CF5C

Product availability: Non-Stock - Not normally stocked in distribution facility

Price*: 1,939.86 USD

Main

Range Compatibility	Lexium 28
Product Or Component Type	Servo motor
Device Short Name	BCH2

Complementary

Maximum Mechanical Speed	5000 rpm
[Us] Rated Supply Voltage	220 V 110 V
Phase	Three phase Single phase
Continuous Stall Current	2.29 A
Continuous Stall Torque	11.24 lbf.in (1.27 N.m) LXM28... 2.6 A, 220 V, single phase 11.24 lbf.in (1.27 N.m) LXM28... 2.6 A, 220 V, three phase 11.24 lbf.in (1.27 N.m) LXM28... 5.7 A, 110 V, single phase
Continuous Power	400 W
Peak Stall Torque	33.72 lbf.in (3.81 N.m) LXM28... 2.6 A, 220 V, single phase 33.72 lbf.in (3.81 N.m) LXM28... 2.6 A, 220 V, three phase 33.72 lbf.in (3.81 N.m) LXM28... 5.7 A, 110 V, single phase
Nominal Output Power	400 W LXM28... 2.6 A, 220 V, single phase 400 W LXM28... 2.6 A, 220 V, three phase 400 W LXM28... 5.7 A, 110 V, single phase
Nominal Torque	11.24 lbf.in (1.27 N.m) LXM28... 2.6 A, 220 V, single phase 11.24 lbf.in (1.27 N.m) LXM28... 2.6 A, 220 V, three phase 11.24 lbf.in (1.27 N.m) LXM28... 5.7 A, 110 V, single phase
Nominal Speed	3000 rpm LXM28... 2.6 A, 220 V, single phase 3000 rpm LXM28... 2.6 A, 220 V, three phase 3000 rpm LXM28... 5.7 A, 110 V, single phase
Maximum Current Irms	7.73 A LXM28... 0.4 kW, 220 V 7.73 A LXM28... 0.4 kW, 110 V
Maximum Permanent Current	2.52 A
Product Compatibility	LXM28... servo drive 0.4 kW, 220 V, single phase LXM28... servo drive 0.4 kW, 220 V, three phase LXM28... servo drive 0.4 kW, 110 V, single phase
Shaft End	Smooth shaft
Shaft Diameter	0.55 in (14 mm)
Shaft Length	1.18 in (30 mm)
Feedback Type	20 bits single turn absolute encoder

Price is “List Price” and may be subject to a trade discount – check with your local distributor or retailer for actual price.

Disclaimer: This documentation is not intended as a substitute for and is not to be used for determining suitability or reliability of these products for specific user applications

Holding Brake	With
Holding Torque	22.13 lbf.in (2.5 N.m) built-in
Mounting Support	Asian standard flange
Motor Flange Size	3.15 in (80 mm)
Electrical Connection	Free lead
Torque Constant	0.55 N.m/A 68 °F (20 °C)
Back Emf Constant	33.5 V/krpm 68 °F (20 °C)
Rotor Inertia	0.72 kg.cm²
Stator Resistance	3.2 Ohm 68 °F (20 °C)
Stator Inductance	11.3 mH 68 °F (20 °C)
Stator Electrical Time Constant	3.53 ms 68 °F (20 °C)
Maximum Radial Force Fr	332 N 3000 rpm
Maximum Axial Force Fa	115 N
Brake Pull-In Power	10.2 W
Type Of Cooling	Natural convection
Length	5.98 in (152 mm)
Number Of Motor Stacks	1
Centring Collar Diameter	2.76 in (70 mm)
Centring Collar Depth	0.16 in (4 mm)
Number Of Mounting Holes	4
Mounting Holes Diameter	0.26 in (6.6 mm)
Circle Diameter Of The Mounting Holes	3.54 in (90 mm)
Distance Shaft Shoulder-Flange	0.16 in (4 mm)
Net Weight	6.17 lb(US) (2.8 kg)

Environment

Ip Degree Of Protection	IP50 IM V3 IP65 IM B5, IM V1
Ambient Air Temperature For Operation	32…104 °F (0…40 °C)

Ordering and shipping details

Category	US1PC5318281
Discount Schedule	PC53
Gtin	3606480733697
Returnability	No
Country Of Origin	CN

Packing Units

Unit Type Of Package 1	PCE
Number Of Units In Package 1	1
Package 1 Height	5.43 in (13.8 cm)
Package 1 Width	6.89 in (17.5 cm)

Package 1 Length	11.65 in (29.6 cm)
Package 1 Weight	7.08 lb(US) (3.21 kg)

Sustainability

Green Premium™ label is Schneider Electric's commitment to delivering products with best-in-class environmental performance. Green Premium promises compliance with the latest regulations, transparency on environmental impacts, as well as circular and low-CO_2 products.

Guide to assessing product sustainability is a white paper that clarifies global eco-label standards and how to interpret environmental declarations.

Learn more about Green Premium >

Guide to assess a product's sustainability >

Transparency RoHS/REACh

Well-being performance

- Reach Free Of Svhc
- Mercury Free
- Rohs Exemption Information — Yes

Certifications & Standards

Reach Regulation	REACh Declaration
Eu Rohs Directive	Pro-active compliance (Product out of EU RoHS legal scope)
China Rohs Regulation	China RoHS declaration
Environmental Disclosure	Product Environmental Profile
Weee	The product must be disposed on European Union markets following specific waste collection and never end up in rubbish bins.
Circularity Profile	End of Life Information
California Proposition 65	WARNING: This product can expose you to chemicals including: Lead and lead compounds, which is known to the State of California to cause cancer and birth defects or other reproductive harm. For more information go to www.P65Warnings.ca.gov

Dimensions Drawings

Dimensions

Dimensions of Motor

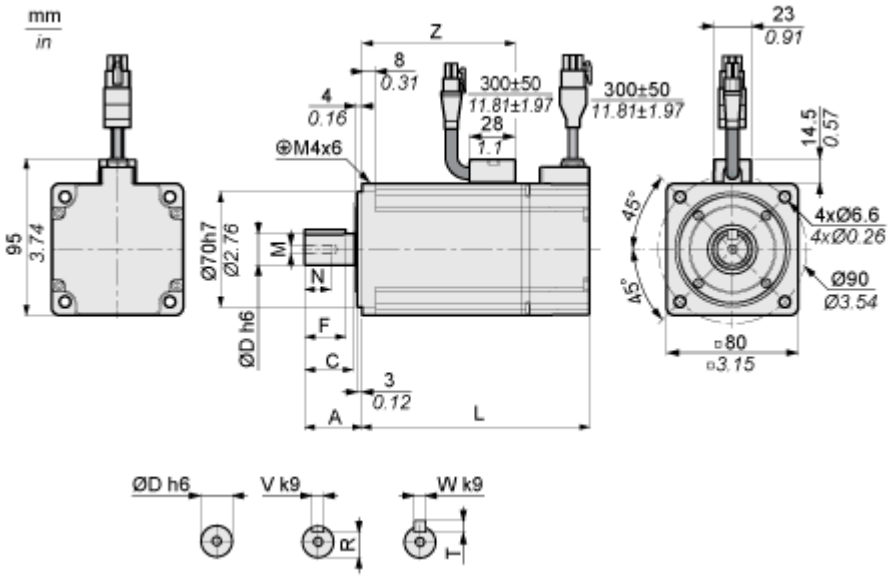

	mm	in.
L (without holding brake)	112	4.41
L (with holding brake)	152	5.98
A	30	1.18
C	24.5	0.96
D	14	0.55
F	20	0.79
R	11	0.43
T	5	0.2
V	5	0.2
W	5	0.2
Z	68	2.68

Performance Curves

Torque/Speed Curves with 230 V Single/Three Phase Supply Voltage

Servo Motor with LXM28AU02••• Servo Drive

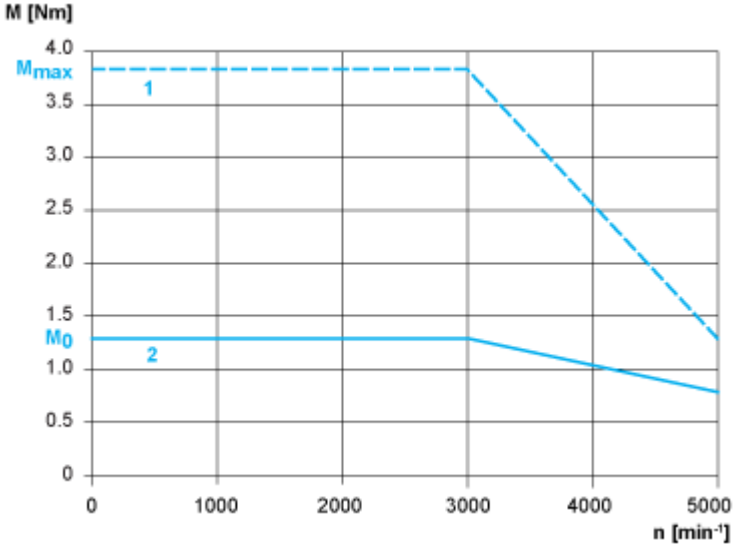

1 : Peak torque

2 : Continuous torque