Product data sheet

Specifications

universal power supply, Phaseo, 1 or 2 phase, 100 to 500 V, 24 V, 10 A

ABL8RPS24100

Product availability: Stock - Normally stocked in distribution facility

Price*: 525.00 USD

Main

Range Of Product	Modicon Power Supply
Product Or Component Type	Power supply
Power Supply Type	Regulated switch mode
Nominal Input Voltage	100...120 V AC single phase N-L1 200...500 V AC phase to phase L1-L2
Kw Rating	240 W
Output Voltage	24 V DC
Power Supply Output Current	10 A
Permissible Temporary Current Boost	1.5 x In for 4 s)
Anti-Harmonic Filter	Low frequency harmonic currents

Complementary

Efficiency At Full Load	170...550 V AC 85...132 V AC
Inrush Current	30 A
Power Factor	0.68 at 240 V AC 0.69 at 120 V AC
Efficiency	87 %
Output Voltage Adjustment	24...28.8 V adjustable
Power Dissipation In W	31 W
Provided Equipment	Power factor correction filter IEC 61000-3-2
Output Protection Type	Against overload manual or automatic reset Against overvoltage 30...32 V, manual reset Against short-circuits manual or automatic reset Against undervoltage tripping if U < 21.6 V Thermal automatic reset
Connections - Terminals	Removable screw terminal block 2 x 2.5 mm², diagnostic relay Screw type terminals 3 x 0.5...3 x 4 mm², AWG 22...AWG 12) input connection Screw type terminals 1 x 0.5...1 x 4 mm², AWG 22...AWG 12) input ground connection Screw type terminals 4 x 0.5...4 x 4 mm², AWG 22...AWG 12) output connection Screw type terminals 1 x 0.5...1 x 4 mm², AWG 22...AWG 12) output ground connection
Status Led	1 LED (green and red) output voltage 1 LED (green, red and orange) output current
Depth	5.71 in (145 mm)

Price is “List Price” and may be subject to a trade discount – check with your local distributor or retailer for actual price.

Disclaimer: This documentation is not intended as a substitute for and is not to be used for determining suitability or reliability of these products for specific user applications

Height	4.92 in (125 mm)
Width	3.39 in (86 mm)
Net Weight	2.20 lb(US) (1 kg)
Output Coupling	Parallel Series
Marking	CE
Mounting Support	35 x 7.5 mm symmetrical DIN rail 35 x 15 mm symmetrical DIN rail
Operating Position	Vertical
Supply	SELV IEC 60950-1 SELV IEC 60204-1 SELV IEC 60364-4-41
Dielectric Strength	3500 V with between input and ground 4000 V with between input and output 500 V with between output and ground

Environment

Standards	UL 508 CSA C22.2 No 60950-1 EN/IEC 62368-1
Product Certifications	CCSAus EAC KC RCM UL
Environmental Characteristic	EMC IEC 61000-6-1 EMC IEC 61000-6-3 EMC EN 55024 EMC IEC 61000-6-4 EMC EN/IEC 61204-3 Safety IEC 60950-1 Safety EN/IEC 61204-3
Operating Altitude	6561.68 ft (2000 m)
Ip Degree Of Protection	IP20 conforming to IEC 60529
Ambient Air Temperature For Operation	122…140 °F (50…60 °C) with derating factor mounting position A < 6561.68 ft (2000 m) -13…122 °F (-25…50 °C) without derating mounting position A < 6561.68 ft (2000 m)

Ordering and shipping details

Category	US1CP1222525
Discount Schedule	CP12
Gtin	3389119405621
Returnability	Yes
Country Of Origin	PH

Packing Units

Unit Type Of Package 1	PCE
Number Of Units In Package 1	1
Package 1 Height	4.49 in (11.4 cm)
Package 1 Width	6.38 in (16.2 cm)
Package 1 Length	7.09 in (18.0 cm)

Package 1 Weight	3.56 lb(US) (1.615 kg)
Unit Type Of Package 2	S06
Number Of Units In Package 2	60
Package 2 Height	28.94 in (73.5 cm)
Package 2 Width	23.62 in (60.0 cm)
Package 2 Length	31.50 in (80.0 cm)
Package 2 Weight	249.12 lb(US) (113.0 kg)

Contractual warranty

Warranty	18 months

Sustainability

Green Premium™ label is Schneider Electric's commitment to delivering products with best-in-class environmental performance. Green Premium promises compliance with the latest regulations, transparency on environmental impacts, as well as circular and low-CO_2 products.

Guide to assessing product sustainability is a white paper that clarifies global eco-label standards and how to interpret environmental declarations.

Learn more about Green Premium >

Guide to assess a product's sustainability >

Transparency RoHS/REACh

Well-being performance

Mercury Free	
Rohs Exemption Information	Yes
Pvc Free	

Certifications & Standards

Reach Regulation	REACh Declaration
Eu Rohs Directive	Pro-active compliance (Product out of EU RoHS legal scope)
China Rohs Regulation	China RoHS declaration
Environmental Disclosure	Product Environmental Profile
Circularity Profile	End of Life Information
California Proposition 65	WARNING: This product can expose you to chemicals including: Lead and lead compounds, which is known to the State of California to cause cancer and birth defects or other reproductive harm. For more information go to www.P65Warnings.ca.gov

Dimensions Drawings

Regulated Switch Mode Power Supplies

Dimensions

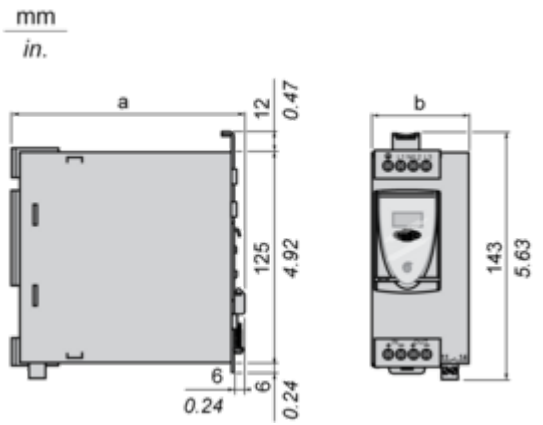

ABL 8	a in mm	a in in.	b in mm	b in in.
RPS24030	125	4.92	45	1.77
RPS24050	125	4.92	56	2.20
RPS24100	145	5.71	86	3.39
RPM24200	145	5.71	146	5.75
WPS24200	160	6.30	96	3.78
WPS24400	160	6.30	166	6.54

Connections and Schema

Regulated Switch Mode Power Supply

Internal Wiring Diagram

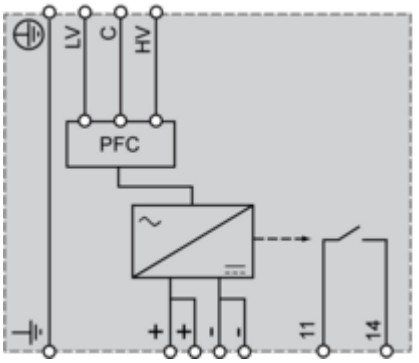

Regulated Switch Mode Power Supply

Line Supply Wiring Diagram

Single-phase (L-N) 100 to 120 V

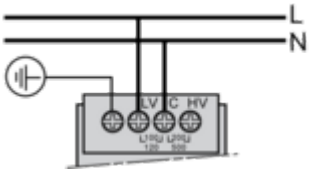

Phase-to-phase (L1-L2) 200 to 500 V

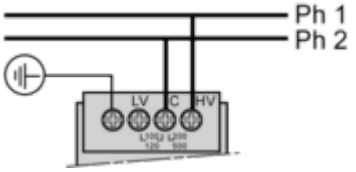

Single-phase (L-N) 200 to 500 V

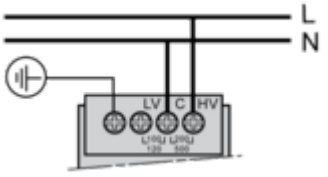

Regulated Switch Mode Power Supplies

Series or Parallel Connection

Series Connection

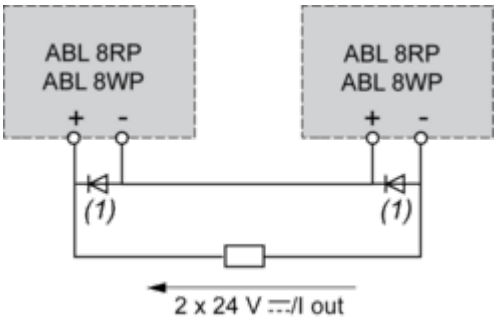

(1) Two Shottky diodes Imin = power supply In and Vmin = 50 V

Parallel Connection

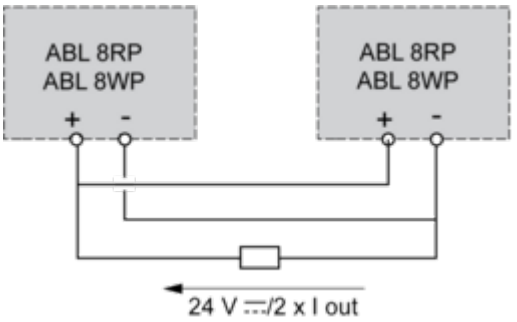

Family	Series	Parallel
ABL 8RPS/8RPM/8WPS	2 products max. (1)	2 products max.

NOTE: Series or parallel connection is only recommended for products with identical references.

For better availability, the power supplies can also be connected in parallel using the **ABL8RED24400** Redundancy module.

Performance Curves

Regulated Switch Mode Power Supplies

Derating

The ambient temperature is a determining factor that limits the power an electronic power supply can deliver continuously. If the temperature around the electronic components is too high, their life will be significantly reduced.
The nominal ambient temperature for the Universal range of Phaseo power supplies is 50°C. Above this temperature, derating is necessary up to a maximum temperature of 60°C.
The graph below shows the power (in relation to the nominal power) that the power supply can deliver continuously, depending on the ambient temperature.

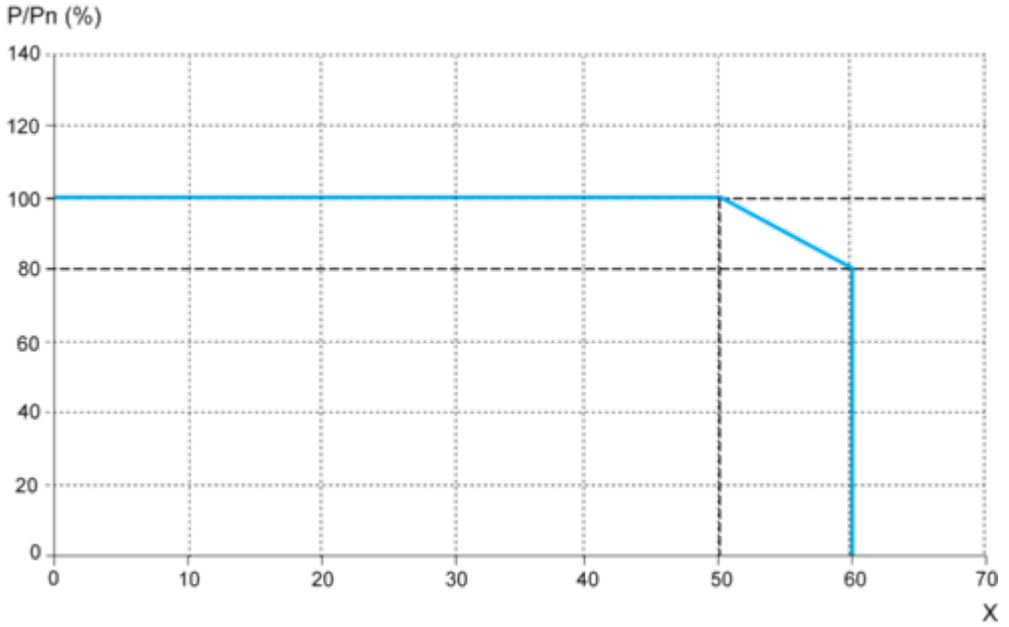

X Maximum operating temperature (°C)
ABL 8RPM, ABL 8RPS, ABL 8WPS mounted vertically
Derating should be considered in extreme operating conditions:

- Intensive operation (output current permanently close to the nominal current, combined with a high ambient temperature)
- Output voltage set above 24 Vdc (to compensate for line voltage drops, for example)
- Parallel connection to increase the total power

Regulated Switch Mode Power Supply

Load Limit

Manual Reset Protection Mode

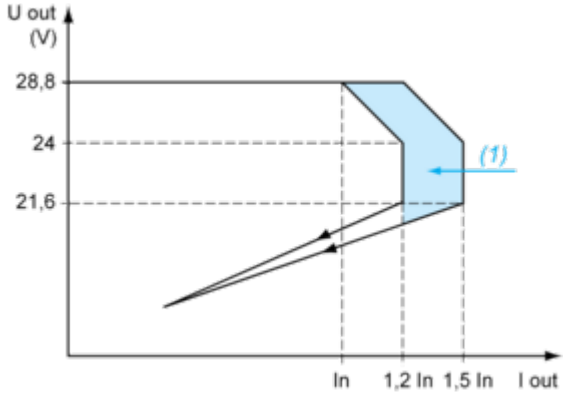

(1) Boost 4s

Automatic Reset Protection Mode

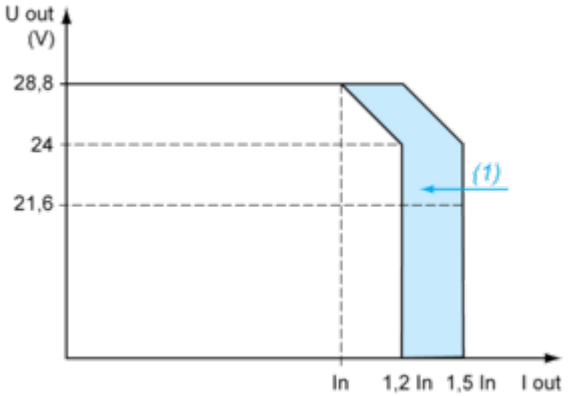

(1) Boost 4s

“Boost” Repeat Accuracy

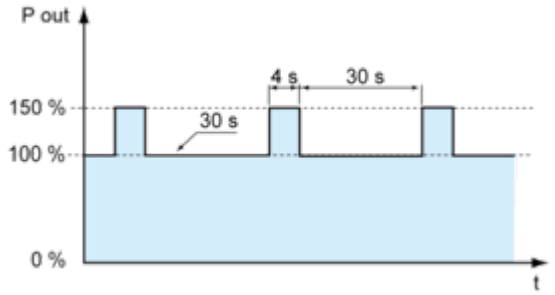

This type of operation is described in detail in the user manual, which can be downloaded from the website.