Product data sheet

Specifications

Green Premium™

Discontinued

regulated power supply, Phaseo, 100 to 240 V, 24 V, 3 A

ABL8REM24030

Discontinued on: Dec 1, 2020

Product availability: Non-Stock - Not normally stocked in distribution facility

Main

Range Of Product	Modicon Power Supply
Product Or Component Type	Power supply
Power Supply Type	Regulated switch mode
Nominal Input Voltage	100...240 V AC phase to phase L1-L2 100...240 V AC single phase N-L1 110...220 V DC
Kw Rating	72 W
Output Voltage	24 V DC
Power Supply Output Current	3 A

Complementary

Efficiency At Full Load	85...264 V AC 100...250 V AC
Input Protection Type	Integrated fuse (not interchangeable)
Inrush Current	30 A
Power Factor	0.65 at 24 V DC
Efficiency	85 %
Output Voltage Adjustment	100...120 % adjustable
Power Dissipation In W	12.7 W
Current Consumption	0.83 A 240 V AC 1.46 A 100 V AC
Output Protection Type	Against overload 1.1 x In Against overvoltage tripping if U > 1.5 x Un Against short-circuits automatic reset Against undervoltage tripping if U < 0.8 x Un
Connections - Terminals	Screw type terminals 2 x 0.14...2 x 2.5 mm², AWG 26...AWG 14) input connection Screw type terminals 1 x 0.14...1 x 2.5 mm², AWG 26...AWG 14) input ground connection Screw type terminals 2 x 0.14...2 x 2.5 mm², AWG 26...AWG 14) output connection Screw type terminals 1 x 0.14...1 x 2.5 mm², AWG 26...AWG 14) output ground connection
Status Led	1 LED (Green) output voltage 1 LED (Orange) input voltage
Depth	4.72 in (120 mm)
Height	4.72 in (120 mm)
Width	1.06 in (27 mm)
Net Weight	1.15 lb(US) (0.52 kg)

Price is “List Price” and may be subject to a trade discount – check with your local distributor or retailer for actual price.

Disclaimer: This documentation is not intended as a substitute for and is not to be used for determining suitability or reliability of these products for specific user applications

Output Coupling	Parallel Series
Marking	CE
Mounting Support	35 x 15 mm symmetrical DIN rail 35 x 7.5 mm symmetrical DIN rail 75 x 7.5 mm symmetrical DIN rail
Operating Position	Vertical
Supply	SELV EN/IEC 60950-1 SELV EN/IEC 60204-1 SELV IEC 60364-4-41
Dielectric Strength	3000 V with between input and ground 3000 V with between input and output 500 V with between output and ground 500 V with between outputs

Environment

Standards	UL 508 CSA C22.2 No 60950-1 EN/IEC 62368-1
Product Certifications	CSA 22-2 No 950 EAC RCM KC UL
Environmental Characteristic	EMC EN 50081-1 EMC EN 50082-2 EMC EN 55024 Safety EN/IEC 60950
Operating Altitude	6561.68 ft (2000 m)
Ip Degree Of Protection	IP20 conforming to EN/IEC 60529
Ambient Air Temperature For Operation	32…122 °F (0…50 °C) without derating mounting position A < 6561.68 ft (2000 m) 122…140 °F (50…60 °C) with derating factor mounting position A < 6561.68 ft (2000 m)

Ordering and shipping details

Category	US1CP1222525
Discount Schedule	CP12
Gtin	00785901616849
Returnability	No
Country Of Origin	CN

Packing Units

Unit Type Of Package 1	PCE
Number Of Units In Package 1	1
Package 1 Height	1.61 in (4.1 cm)
Package 1 Width	5.43 in (13.8 cm)
Package 1 Length	5.79 in (14.7 cm)
Package 1 Weight	9.88 oz (280 g)

Contractual warranty

Warranty	18 months

Sustainability

Green Premium™ label is Schneider Electric's commitment to delivering products with best-in-class environmental performance. Green Premium promises compliance with the latest regulations, transparency on environmental impacts, as well as circular and low-CO_2 products.

Guide to assessing product sustainability is a white paper that clarifies global eco-label standards and how to interpret environmental declarations.

Learn more about Green Premium >

Guide to assess a product's sustainability >

Transparency RoHS/REACh

Well-being performance

Mercury Free	
Rohs Exemption Information	Yes
Pvc Free	

Certifications & Standards

Reach Regulation	REACh Declaration
Eu Rohs Directive	Pro-active compliance (Product out of EU RoHS legal scope)
China Rohs Regulation	China RoHS declaration
Environmental Disclosure	Product Environmental Profile
Circularity Profile	End of Life Information
California Proposition 65	WARNING: This product can expose you to chemicals including: Lead and lead compounds, which is known to the State of California to cause cancer and birth defects or other reproductive harm. For more information go to www.P65Warnings.ca.gov

Dimensions Drawings

Regulated Switch Mode Power Supply

Dimensions and Mounting

Mounting on a 35 mm/1.37 in. or 75 mm/2.95 in. Rail

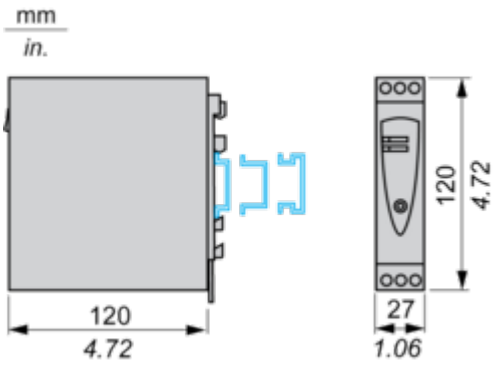

Connections and Schema

Regulated Switch Mode Power Supply

Internal Wiring Diagram

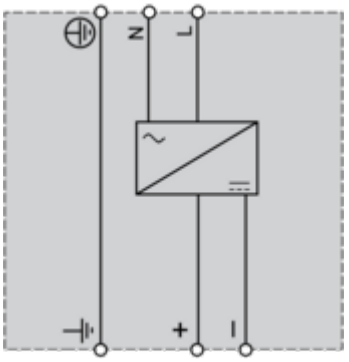

Regulated Switch Mode Power Supplies

Series or Parallel Connection

Series Connection

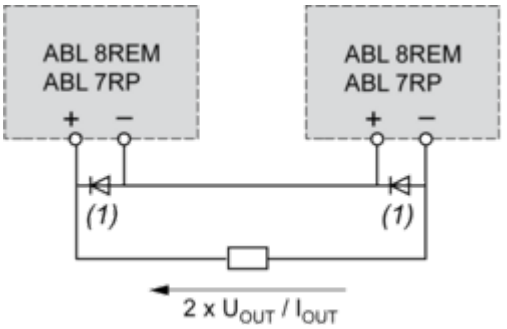

(1) Two Shottky diodes Imin = power supply In and Vmin = 50 V

Parallel Connection

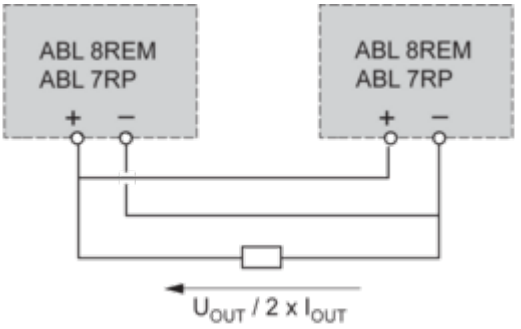

Family	Series	Parallel
ABL 8REM/7RP	2 products max.	2 products max.

NOTE: Series or parallel connection is only recommended for products with identical references.

Performance Curves

Regulated Switch Mode Power Supplies

Derating

The ambient temperature is a determining factor that limits the power an electronic power supply can deliver continuously. If the temperature around the electronic components is too high, their life will be significantly reduced.
The nominal ambient temperature for the Optimum range of Phaseo power supplies is 50 °C. Above this temperature, derating is necessary up to a maximum temperature of 60 °C.
The graph below shows the power as a percentage of the nominal power that the power supply can deliver continuously, depending on the ambient temperature.

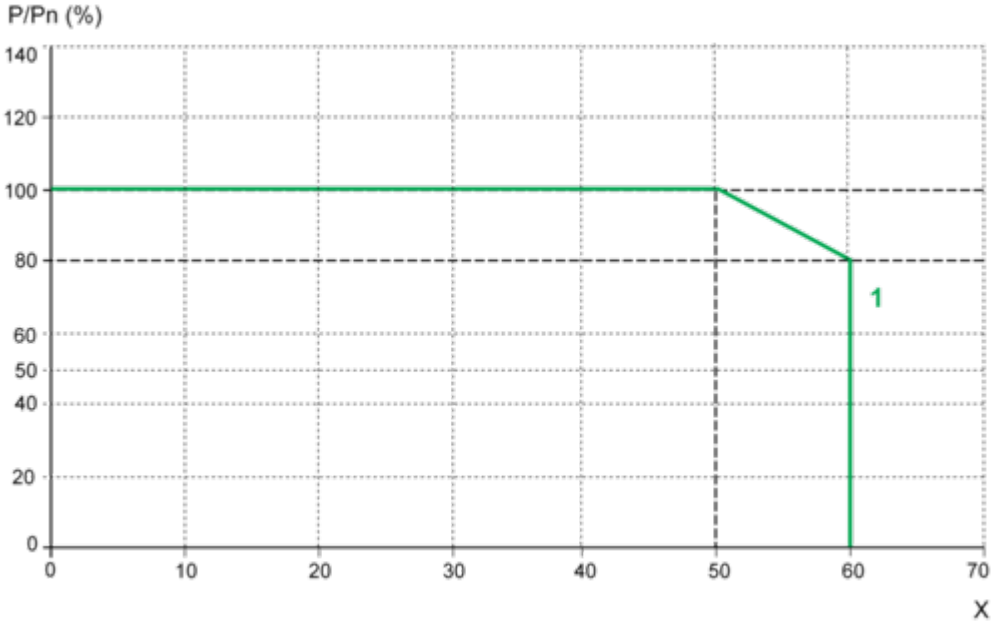

X Maximum operating temperature (°C)
(1) ABL 8REM, ABL 7RP mounted vertically
Derating should be considered in extreme operating conditions:

- Intensive operation (output current permanently close to the nominal current, combined with a high ambient temperature)
- Output voltage set above 24 Vdc (to compensate for line voltage drops, for example)
- Parallel connection to increase the total power

Regulated Switch Mode Power Supply

Load Limit

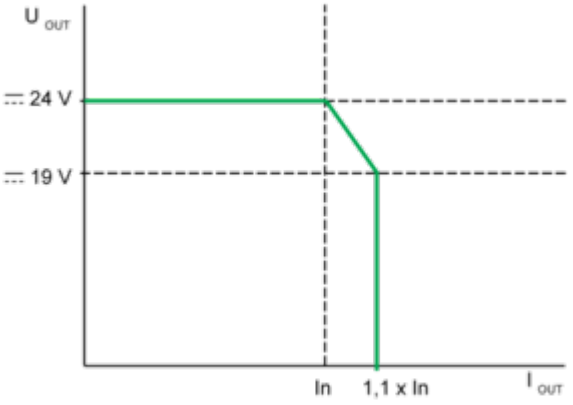

Regulated Switch Mode Power Supply
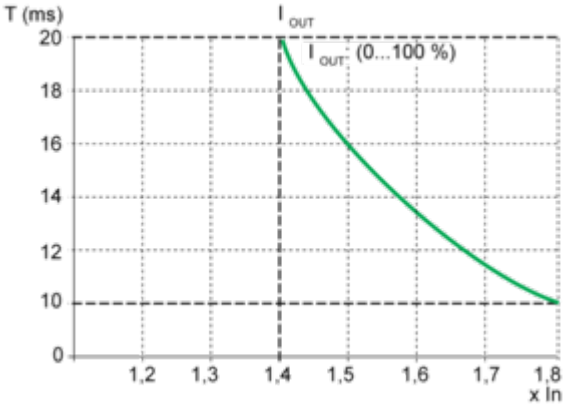
Temporary Overloads