Product data sheet

Specifications

Green Premium™

Regulated switch power supply, modicon power supply, with auto reset, 1 or 2 phase, 100...240V AC, 24V, 2.5A

ABL7RM24025

Discontinued

Discontinued on: Jan 23, 2021

Product availability: Stock - Normally stocked in distribution facility

Main

Range Of Product	Modicon Power Supply
Product Or Component Type	Power supply
Power Supply Type	Regulated switch mode
Nominal Input Voltage	100...240 V AC phase to phase L1-L2 100...240 V AC single phase N-L1
Kw Rating	60 W
Output Voltage	24 V DC
Power Supply Output Current	2.5 A
Anti-Harmonic Filter	Low frequency harmonic currents

Complementary

Efficiency At Full Load	85...264 V AC
Input Protection Type	Integrated fuse (not interchangeable)
Inrush Current	90 A
Power Factor	0.5 at 24 V DC
Efficiency	84 %
Output Voltage Adjustment	22.2...28.8 V adjustable
Power Dissipation In W	11.4 W
Current Consumption	0.7 A 240 V AC
Provided Equipment	Power factor correction filter IEC 61000-3-2
Residual Ripple	200 mV
Output Protection Type	Against undervoltage tripping if U < 19 V Against short-circuits
Connections - Terminals	Screw type terminals 2 x 0.14...2 x 2.5 mm², AWG 26...AWG 14) input connection Screw type terminals 4 x 0.14...4 x 2.5 mm², AWG 26...AWG 14) output connection
Status Led	1 LED (Green) output voltage
Depth	2.32 in (59 mm)
Height	3.94 in (100 mm)
Width	2.91 in (74 mm)
Net Weight	0.56 lb(US) (0.255 kg)

Price is “List Price” and may be subject to a trade discount – check with your local distributor or retailer for actual price.

Disclaimer: This documentation is not intended as a substitute for and is not to be used for determining suitability or reliability of these products for specific user applications

Output Coupling	Series Parallel
Marking	CE
Mounting Support	35 x 7.5 mm symmetrical DIN rail panel 2 screws, diameter : 4 mm 35 x 15 mm symmetrical DIN rail
Operating Position	Vertical
Supply	SELV EN/IEC 60950-1 SELV EN/IEC 60204-1 SELV IEC 60364-4-41
Dielectric Strength	3000 V with between input and output

Environment

Standards	CSA C22.2 No 60950-1 UL 508 EN/IEC 62368-1
Product Certifications	EAC CULus 508 TUV 60950-1 RCM KC
Environmental Characteristic	EMC EN 55022 Class B EMC EN 61000-6-3 EMC EN/IEC 61000-6-2 EMC EN/IEC 61204-3 Safety EN/IEC 60950-1
Operating Altitude	6561.68 ft (2000 m)
Ip Degree Of Protection	IP20 conforming to EN/IEC 60529
Ambient Air Temperature For Operation	-13…131 °F (-25…55 °C) without derating mounting position A < 6561.68 ft (2000 m) 131…158 °F (55…70 °C) with derating factor mounting position A < 6561.68 ft (2000 m)

Ordering and shipping details

Category	US1CP1222525
Discount Schedule	CP12
Gtin	3389119404600
Returnability	No
Country Of Origin	US

Packing Units

Unit Type Of Package 1	PCE
Number Of Units In Package 1	1
Package 1 Height	2.68 in (6.8 cm)
Package 1 Width	3.27 in (8.3 cm)
Package 1 Length	4.25 in (10.8 cm)
Package 1 Weight	11.22 oz (318 g)

Contractual warranty

Warranty	18 months

Sustainability

Green Premium™ label is Schneider Electric's commitment to delivering products with best-in-class environmental performance. Green Premium promises compliance with the latest regulations, transparency on environmental impacts, as well as circular and low-CO_2 products.

Guide to assessing product sustainability is a white paper that clarifies global eco-label standards and how to interpret environmental declarations.

Learn more about Green Premium >

Guide to assess a product's sustainability >

Transparency RoHS/REACh

Well-being performance

Reach Free Of Svhc	
Toxic Heavy Metal Free	
Mercury Free	
Rohs Exemption Information	Yes
Pvc Free	

Certifications & Standards

Reach Regulation	REACh Declaration
Eu Rohs Directive	Pro-active compliance (Product out of EU RoHS legal scope) EU RoHS Declaration
China Rohs Regulation	China RoHS declaration
Environmental Disclosure	Product Environmental Profile
Circularity Profile	End of Life Information
California Proposition 65	WARNING: This product can expose you to chemicals including: Lead and lead compounds, which is known to the State of California to cause cancer and birth defects or other reproductive harm. For more information go to www.P65Warnings.ca.gov

Dimensions Drawings

Regulated Switch Mode Power Supplies

Dimensions

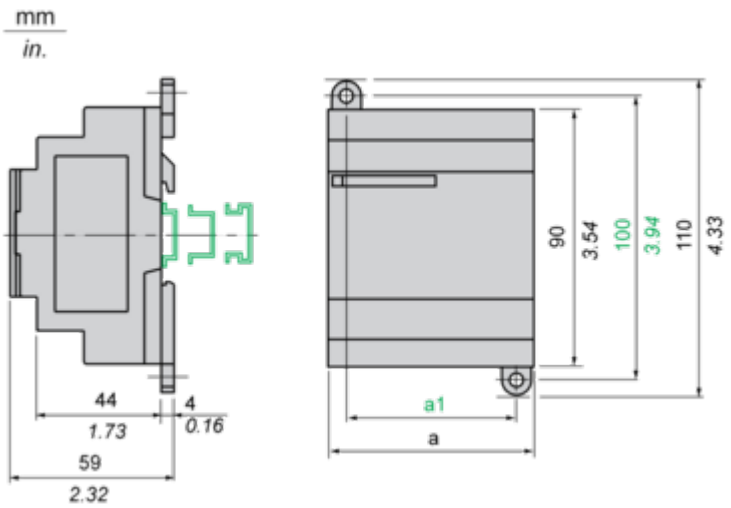

	a in mm	a in in.	a1 in mm	a1 in in.
ABL8MEM05040	54	2.12	42	1.65
ABL8MEM12020	54	2.12	42	1.65
ABL8MEM24003	36	1.41	24	0.94
ABL8MEM24006	36	1.41	24	0.94
ABL8MEM24012	54	2.12	42	1.65
ABL7RM24025	74	2.91	60	2.36

Connections and Schema

Regulated Switch Mode Power Supply

Internal Wiring Diagram

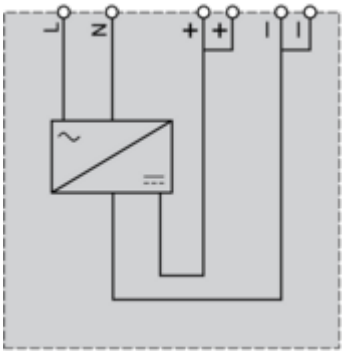

Regulated Switch Mode Power Supplies

Series or Parallel Connection

Series Connection

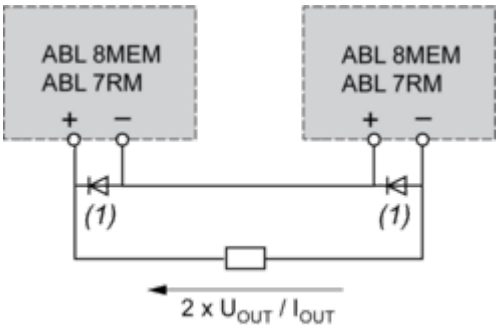

(1) Two Shottky diodes Imin = power supply In and Vmin = 50 V

Parallel Connection

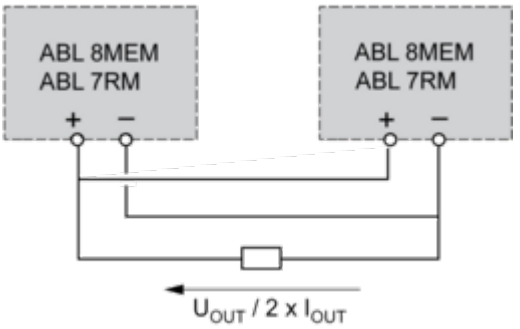

Family	Series	Parallel
ABL 7RM/8MEM	2 products max.	2 products max.

NOTE: Series or parallel connection is only recommended for products with identical references.

Performance Curves

Regulated Switch Mode Power Supplies

Derating

The ambient temperature is a determining factor that limits the power an electronic power supply can deliver continuously. If the temperature around the electronic components is too high, their life will be significantly reduced. The nominal ambient temperature for the Modular range of Phaseo power supplies is 55°C. Above this temperature, derating is necessary up to a maximum temperature of 70°C (except for the ABL7RM24025 model).
The graph below shows the power as a percentage of the nominal power that the power supply can deliver continuously, depending on the ambient temperature.

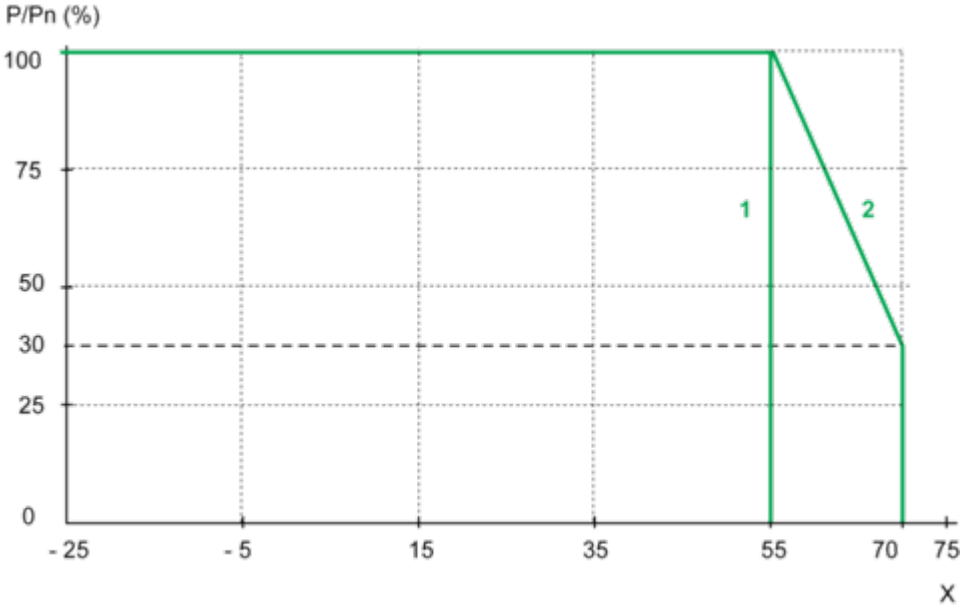

X Maximum operating temperature (°C)
(1) With an ABL7RM24025
(2) With an ABL8MEM•••••