Product data sheet

Specifications

Green Premium™

sub-base - soldered solid state output relay ABE7 - 16 outputs - 0.5 A

ABE7S16S1B2

Product availability: Non-Stock - Not normally stocked in distribution facility

Price*: 819.00 USD

Main

Range Of Product	Modicon ABE7
Product Or Component Type	Solid state output relay sub-base
[Us] Rated Supply Voltage	24 V DC PLC end 24 V DC preactuator end
Number Of Channels	16
Relay Type	Soldered solid state relay

Complementary

Terminal Block Type	Removable
Isolation Plc/Operative Part	No
Fixing Mode	By clips (35 mm symmetrical DIN rail) By screws (solid plate with fixing kit)
Current State 0 Guaranteed	0.4 mA PLC end)
Voltage State 0 Guaranteed	3.4 V PLC end
Current State 1 Guaranteed	3.1 mA PLC end)
Voltage State 1 Guaranteed	16.9 V PLC end
Maximum Current Per Output Common	9 A
Current Per Channel	0.5 A preactuator end
Minimum Switching Current	1 mA
Drop-Out Voltage	0.3 V preactuator end)
Maximum Switching Current	700 mA DC-12 700 mA DC-13
Maximum Tungsten Load	<10 W DC-6
Maximum Residual Current	0.5 mA preactuator end
Fault Type	Short-circuit Overload
Fault Indication	Without
Switchable Inductive Energy L/R	<= 400(U.I) ms
Maximum Circuit Breaker Threshold	0.75 A
Response Time	<= 0.1 ms from state 1 to 0 <= 0.2 ms from state 0 to 1
Switching Frequency	< 0.6/LI² Hz

Price is “List Price” and may be subject to a trade discount – check with your local distributor or retailer for actual price.

Disclaimer: This documentation is not intended as a substitute for and is not to be used for determining suitability or reliability of these products for specific user applications

Installation Category	II IEC 60664-1
Tightening Torque	5.31 lbf.in (0.6 N.m) flat Ø 3.5 mm
Width	4.92 in (125 mm)
Net Weight	0.88 lb(US) (0.4 kg)

Environment

Product Certifications	GL UL DNV CSA EAC
Ip Degree Of Protection	IP2X conforming to IEC 60529
Protective Treatment	TC
Resistance To Incandescent Wire	1382 °F (750 °C) 30 s IEC 60695-2-11
Shock Resistance	15 gn 11 ms IEC 60068-2-27
Resistance To Radiated Fields	9.14 V/m (10 V/m) 26000000…1000000000 Hz)IEC 61000-4-3 level 3
Resistance To Fast Transients	2 kV level 3 IEC 61000-4-4
Ambient Air Temperature For Operation	23…140 °F (-5…60 °C) IEC 61131-2
Ambient Air Temperature For Storage	-40…176 °F (-40…80 °C) IEC 61131-2
Pollution Degree	2 IEC 60664-1

Ordering and shipping details

Category	US10CP222375
Discount Schedule	0CP2
Gtin	3389110838862
Returnability	No
Country Of Origin	LV

Packing Units

Unit Type Of Package 1	PCE
Number Of Units In Package 1	1
Package 1 Height	2.80 in (7.1 cm)
Package 1 Width	3.27 in (8.3 cm)
Package 1 Length	5.35 in (13.6 cm)
Package 1 Weight	12.10 oz (343.0 g)
Unit Type Of Package 2	S02
Number Of Units In Package 2	9
Package 2 Height	5.91 in (15.0 cm)
Package 2 Width	11.81 in (30.0 cm)
Package 2 Length	15.75 in (40.0 cm)
Package 2 Weight	7.56 lb(US) (3.431 kg)

Contractual warranty

Warranty	18 months

Sustainability

Green Premium™ label is Schneider Electric's commitment to delivering products with best-in-class environmental performance. Green Premium promises compliance with the latest regulations, transparency on environmental impacts, as well as circular and low-CO_2 products.

Guide to assessing product sustainability is a white paper that clarifies global eco-label standards and how to interpret environmental declarations.

Learn more about Green Premium >

Guide to assess a product's sustainability >

Transparency RoHS/REACh

Well-being performance

Mercury Free

Rohs Exemption Information	Yes

Certifications & Standards

Reach Regulation	REACh Declaration
Eu Rohs Directive	Pro-active compliance (Product out of EU RoHS legal scope)
China Rohs Regulation	China RoHS declaration
Environmental Disclosure	Product Environmental Profile
Weee	The product must be disposed on European Union markets following specific waste collection and never end up in rubbish bins.
Circularity Profile	End of Life Information
California Proposition 65	WARNING: This product can expose you to chemicals including: Lead and lead compounds, which is known to the State of California to cause cancer and birth defects or other reproductive harm. For more information go to www.P65Warnings.ca.gov

Dimensions Drawings

Dimensions

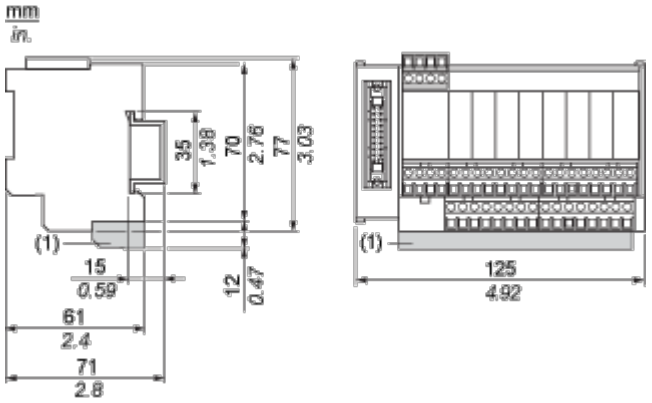

(1) ABE7BV20 / ABE7BV20E

Mounting and Clearance

Mounting

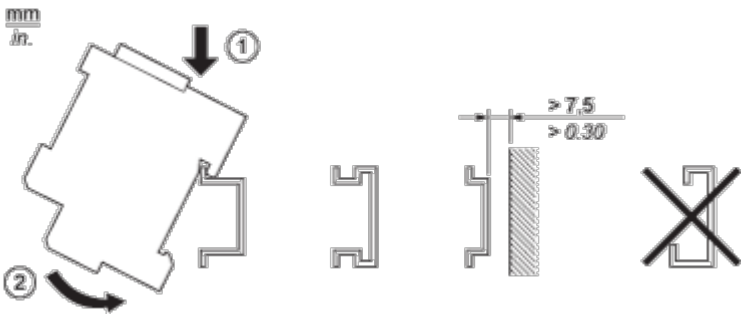

Connections and Schema

HE10 16 Channels

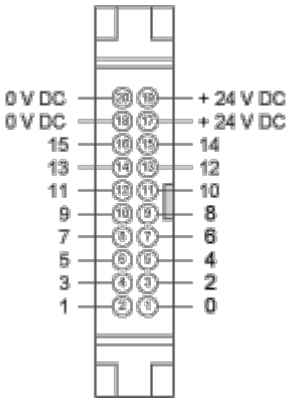

Wiring Diagram

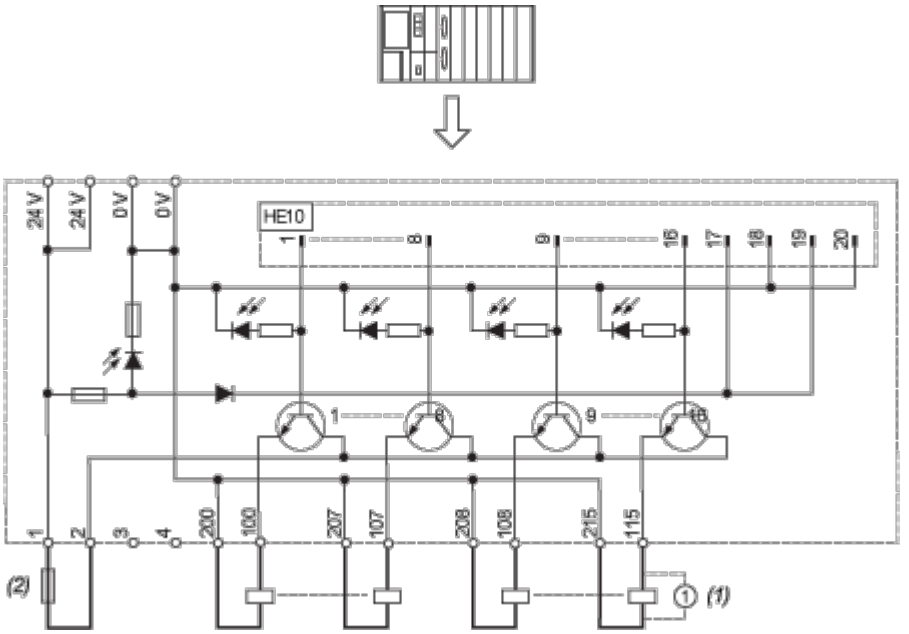

(1) Inductive load

(2) AB1FUSE435U5X + quick acting FUSE 5 x 20 type F.

Performance Curves

Curves for Determining Cable Type and Length According to the Current

16-channel Sub-base

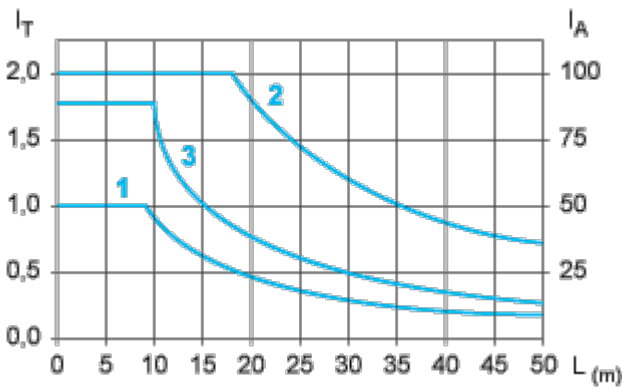

L Cable length

I_T Total current per sub base (A)

I_A Average current per channel (mA)

(1) TSXCDP••2 and ABFH20H••0 cables with c.s.a. 0.08 mm^2 (AWG 28).

(2) TSXCDP••3 cables with c.s.a. 0.34 mm^2 (AWG 22).

(3) Cables with c.s.a. 0.13 mm^2 (AWG 26).

The curves are given for a voltage drop of 1 V in the cable. For n volts tolerance, multiply the length determined from the graph by n.