# Product data sheet

Specifications

Green Premium™

## sub-base - soldered solid state output relay ABE7 - 16 inputs - 24 V DC

ABE7S16E2B1

**Product availability: Non-Stock - Not normally stocked in distribution facility**

**Price*: 998.00 USD**

## Main

| | |
|---|---|
| **Range Of Product** | Modicon ABE7 |
| **Product Or Component Type** | Solid state input relay sub-base |
| **[Us] Rated Supply Voltage** | 24 V DC PLC end)<br>24 V DC sensor end) |
| **Number Of Channels** | 16 |
| **Number Of Terminal Per Channel** | 2 |
| **Connections - Terminals** | Screw type terminals, 1 x 0.09...1 x 1.5 mm², 0.00…0.00 in² (0.09…1.5 mm²) AWG 28...AWG 16) flexible with cable end<br>Screw type terminals, 1 x 0.14...1 x 2.5 mm², 0.00…0.00 in² (0.14…2.5 mm²) AWG 26...AWG 12) solid<br>Screw type terminals, 1 x 0.14...1 x 2.5 mm², 0.00…0.00 in² (0.14…2.5 mm²) AWG 26...AWG 14) flexible without cable end<br>Screw type terminals, 2 x 0.09...2 x 0.75 mm², 0.00…0.00 in² (0.09…0.75 mm²) AWG 28...AWG 20) flexible with cable end<br>Screw type terminals, 2 x 0.2...2 x 2.5 mm², 0.00…0.00 in² (0.2…2.5 mm²) AWG 24...AWG 14) solid |

## Complementary

| | |
|---|---|
| **Terminal Block Type** | Removable |
| **Supply Voltage Limits** | 19…30 V DC PLC end)IEC 61131-2 |
| **Isolation Plc/Operative Part** | Yes |
| **Protection Type** | Internal fuse 1 A 5 x 20 mm fast blow PLC end<br>Adjustable by external fuse fast blow sensor end |
| **Fixing Mode** | By clips (35 mm symmetrical DIN rail)<br>By screws (solid plate with fixing kit) |
| **Current Per Channel** | 0.012 A |
| **Current State 1 Guaranteed** | >= 2 mA sensor end) |
| **Voltage State 1 Guaranteed** | >= 15 V sensor end |
| **Maximum Switching Current** | 15 mA PLC end) |
| **Minimum Switching Current** | 1 mA for PLC end |
| **Response Time** | <= 0.05 ms from state 0 to 1<br><= 0.4 ms from state 1 to 0 |
| **Switching Frequency** | <= 1000 Hz 50 % |
| **[Uimp] Rated Impulse Withstand Voltage** | 2.5 kV IEC 60947-1 |
| **[Ui] Rated Insulation Voltage** | 2000 V |
| **Installation Category** | II IEC 60664-1 |

Price is “List Price” and may be subject to a trade discount – check with your local distributor or retailer for actual price.

Disclaimer: This documentation is not intended as a substitute for and is not to be used for determining suitability or reliability of these products for specific user applications

| | |
|---|---|
| **Tightening Torque** | 5.31 lbf.in (0.6 N.m) flat Ø 3.5 mm |
| **Net Weight** | 0.82 lb(US) (0.37 kg) |

## Environment

| | |
|---|---|
| **Dielectric Strength** | 2000 V 50/60 Hz IEC 60947-1 |
| **Product Certifications** | UL<br>DNV<br>CSA<br>GL<br>EAC |
| **Standards** | IEC 61131-2 Type 1 |
| **Ip Degree Of Protection** | IP2X conforming to IEC 60529 |
| **Resistance To Incandescent Wire** | 1382 °F (750 °C) IEC 60695-2-11 |
| **Shock Resistance** | 15 gn 11 ms IEC 60068-2-27 |
| **Vibration Resistance** | 2 gn 10…150 Hz)IEC 60068-2-6 |
| **Resistance To Electrostatic Discharge** | 4 kV contact) level 3 IEC 61000-4-2<br>8 kV air) level 3 IEC 61000-4-2 |
| **Resistance To Radiated Fields** | 9.14 V/m (10 V/m) 26000000…1000000000 Hz)IEC 61000-4-3 level 3 |
| **Resistance To Fast Transients** | 2 kV level 3 IEC 61000-4-4 |
| **Ambient Air Temperature For Operation** | 23…140 °F (-5…60 °C) IEC 61131-2 |
| **Ambient Air Temperature For Storage** | -40…176 °F (-40…80 °C) IEC 61131-2 |
| **Pollution Degree** | 2 IEC 60664-1 |

## Ordering and shipping details

| | |
|---|---|
| **Category** | US10CP222375 |
| **Discount Schedule** | 0CP2 |
| **Gtin** | 3389110546248 |
| **Returnability** | No |
| **Country Of Origin** | FR |

## Packing Units

| | |
|---|---|
| **Unit Type Of Package 1** | PCE |
| **Number Of Units In Package 1** | 1 |
| **Package 1 Height** | 2.76 in (7.0 cm) |
| **Package 1 Width** | 3.27 in (8.3 cm) |
| **Package 1 Length** | 8.27 in (21.0 cm) |
| **Package 1 Weight** | 15.45 oz (438.0 g) |
| **Unit Type Of Package 2** | S03 |
| **Number Of Units In Package 2** | 16 |
| **Package 2 Height** | 11.81 in (30.0 cm) |
| **Package 2 Width** | 11.81 in (30.0 cm) |
| **Package 2 Length** | 15.75 in (40.0 cm) |
| **Package 2 Weight** | 16.49 lb(US) (7.478 kg) |

## Contractual warranty

| | |
|---|---|
| **Warranty** | 18 months |

## Sustainability

**Green Premium™ label** is Schneider Electric's commitment to delivering products with best-in-class environmental performance. Green Premium promises compliance with the latest regulations, transparency on environmental impacts, as well as circular and low-$CO_2$ products.

**Guide to assessing product sustainability** is a white paper that clarifies global eco-label standards and how to interpret environmental declarations.

Learn more about Green Premium >

Guide to assess a product's sustainability >

Transparency RoHS/REACh

## Well-being performance

Mercury Free

Rohs Exemption Information Yes

## Certifications & Standards

| | |
|---|---|
| **Reach Regulation** | REACh Declaration |
| **Eu Rohs Directive** | Pro-active compliance (Product out of EU RoHS legal scope) |
| **China Rohs Regulation** | China RoHS declaration |
| **Environmental Disclosure** | Product Environmental Profile |
| **Weee** | The product must be disposed on European Union markets following specific waste collection and never end up in rubbish bins. |
| **Circularity Profile** | End of Life Information |
| **California Proposition 65** | WARNING: This product can expose you to chemicals including: Lead and lead compounds, which is known to the State of California to cause cancer and birth defects or other reproductive harm. For more information go to www.P65Warnings.ca.gov |

Dimensions Drawings

## Dimensions

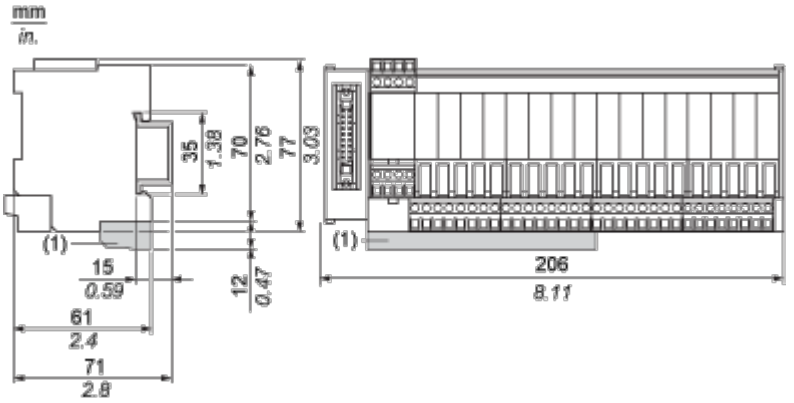


(1) ABE7BV20 / ABE7BV20E

Mounting and Clearance

## Mounting

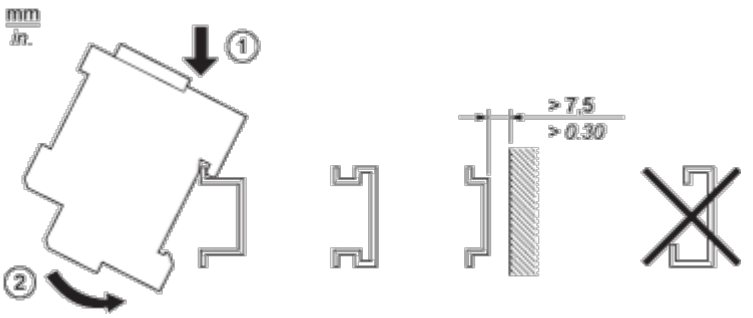

Connections and Schema

**HE10 16 Channels**

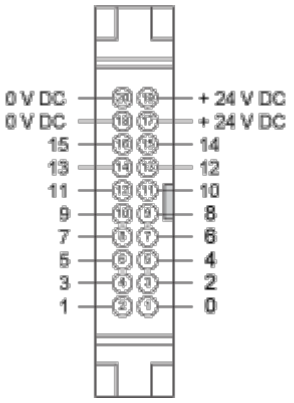

## Wiring Diagram

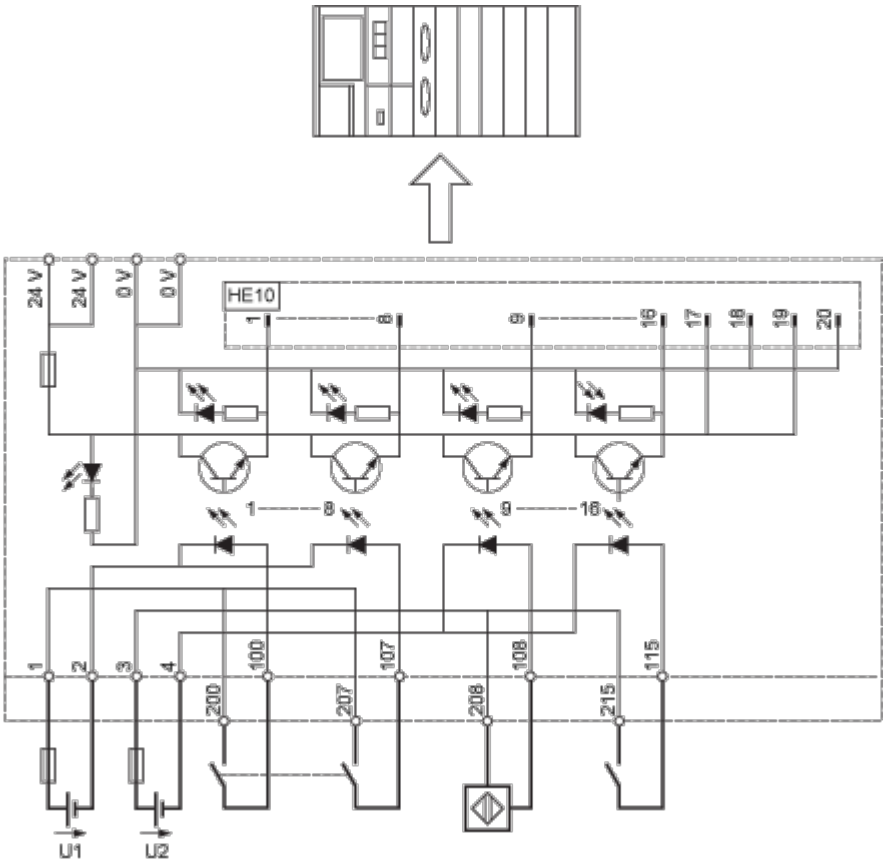


| ABE7 | U1, U2 |
|---|---|
| S16E2B1 / E2B1E | 24 VDC |
| S16E2E1 / E2E1E | 48 VDC |
| S16E2E0 / E2E0E | 48 VAC |
| S16E2F0 / E2F0E | 115 VAC |
| S16E2M0 / E2M0E | 230 VAC |

## Performance Curves

### Curves for Determining Cable Type and Length According to the Current

#### 16-channel Sub-base

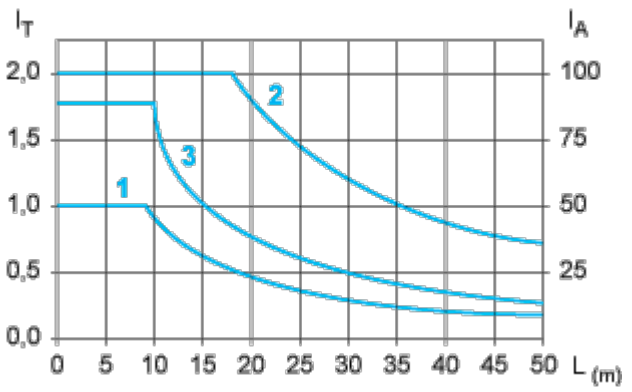


L Cable length

$I_T$ Total current per sub base (A)

$I_A$ Average current per channel (mA)

(1) TSXCDP••2 and ABFH20H••0 cables with c.s.a. 0.08 $mm^2$ (AWG 28).

(2) TSXCDP••3 cables with c.s.a. 0.34 $mm^2$ (AWG 22).

(3) Cables with c.s.a. 0.13 $mm^2$ (AWG 26).

The curves are given for a voltage drop of 1 V in the cable. For n volts tolerance, multiply the length determined from the graph by n.