Product data sheet

Specifications

Sub-base with plug-in electromechanical relay ABE7 - 16 channels - relay 10 mm

ABE7R16T210

Product availability: Non-Stock - Not normally stocked in distribution facility

Price*: 914.00 USD

Main

Range Of Product	Modicon ABE7
Product Or Component Type	Sub-base with plug-in electromechanical relay
Sub-Base Type	Output sub-base
[Us] Rated Supply Voltage	19...30 V IEC 61131-2
Number Of Channels	16

Complementary

Supply Voltage Type	DC
Product Compatibility	ABR7S21
Contacts Type And Composition	1 NO
Status Led	1 LED per channel (Green) channel status 1 LED (Green) power ON
Polarity Distribution	Volt-free
Short-Circuit Protection	1 A internal fuse, 5 x 20 mm, fast blow PLC end)
Fixing Mode	By clips (35 mm symmetrical DIN rail) By screws (solid plate with fixing kit)
Maximum Supply Current	1 A
Voltage Drop On Power Supply Fuse	0.3 V
[Ui] Rated Insulation Voltage	2000 V terminals/mounting rails 300 V coil circuit/contact circuits IEC 60947-1
[Uimp] Rated Impulse Withstand Voltage	2.5 kV
Installation Category	II IEC 60664-1
Tightening Torque	5.31 lbf.in (0.6 N.m) flat Ø 3.5 mm
Net Weight	1.62 lb(US) (0.735 kg)

Environment

Product Certifications	GL CSA UL DNV EAC
Ip Degree Of Protection	IP2X conforming to IEC 60529
Resistance To Incandescent Wire	1382 °F (750 °C) IEC 60695-2-11

Price is “List Price” and may be subject to a trade discount – check with your local distributor or retailer for actual price.

Disclaimer: This documentation is not intended as a substitute for and is not to be used for determining suitability or reliability of these products for specific user applications

Shock Resistance	15 gn 11 ms IEC 60068-2-27
Vibration Resistance	2 gn 10…150 Hz)IEC 60068-2-6
Resistance To Electrostatic Discharge	4 kV contact) level 3 IEC 61000-4-2 8 kV air) level 3 IEC 61000-4-2
Resistance To Radiated Fields	9.14 V/m (10 V/m) 26000000…1000000000 Hz)IEC 61000-4-3 level 3
Resistance To Fast Transients	2 kV level 3 IEC 61000-4-4
Ambient Air Temperature For Operation	23…140 °F (-5…60 °C) IEC 61131-2
Ambient Air Temperature For Storage	-40…176 °F (-40…80 °C) IEC 61131-2
Pollution Degree	2 IEC 60664-1

Ordering and shipping details

Category	US10CP222375
Discount Schedule	0CP2
Gtin	3389110644630
Returnability	Yes
Country Of Origin	ID

Packing Units

Unit Type Of Package 1	PCE
Number Of Units In Package 1	1
Package 1 Height	2.99 in (7.600 cm)
Package 1 Width	3.78 in (9.600 cm)
Package 1 Length	8.58 in (21.800 cm)
Package 1 Weight	24.76 oz (702.000 g)
Unit Type Of Package 2	S03
Number Of Units In Package 2	12
Package 2 Height	11.81 in (30.000 cm)
Package 2 Width	11.81 in (30.000 cm)
Package 2 Length	15.75 in (40.000 cm)
Package 2 Weight	19.68 lb(US) (8.926 kg)

Contractual warranty

Warranty	18 months

Sustainability

Green Premium™ label is Schneider Electric's commitment to delivering products with best-in-class environmental performance. Green Premium promises compliance with the latest regulations, transparency on environmental impacts, as well as circular and low-CO_2 products.

Guide to assessing product sustainability is a white paper that clarifies global eco-label standards and how to interpret environmental declarations.

Learn more about Green Premium >

Guide to assess a product's sustainability >

Transparency RoHS/REACh

Well-being performance

Mercury Free

Rohs Exemption Information	Yes

Certifications & Standards

Reach Regulation	REACh Declaration
Eu Rohs Directive	Pro-active compliance (Product out of EU RoHS legal scope)
China Rohs Regulation	China RoHS declaration
Environmental Disclosure	Product Environmental Profile
Weee	The product must be disposed on European Union markets following specific waste collection and never end up in rubbish bins.
Circularity Profile	End of Life Information
California Proposition 65	WARNING: This product can expose you to chemicals including: Lead and lead compounds, which is known to the State of California to cause cancer and birth defects or other reproductive harm. For more information go to www.P65Warnings.ca.gov

Dimensions Drawings

Dimensions

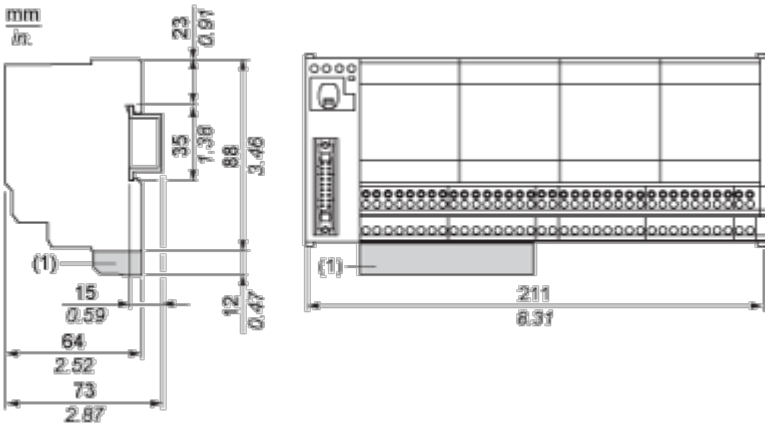

(1) ABE7BV10 / BV20, ABE7BV10E / BV20E

Mounting and Clearance

Mounting

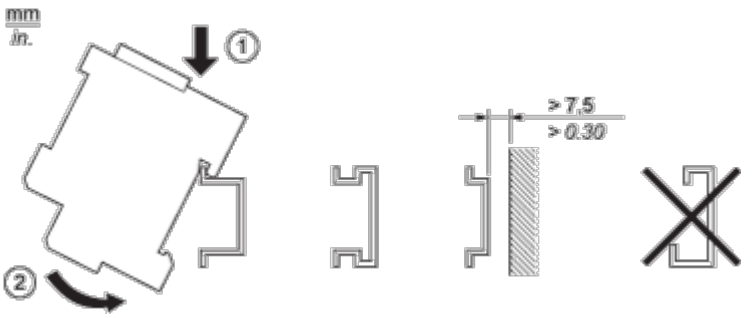

Connections and Schema

HE10 16 Channels

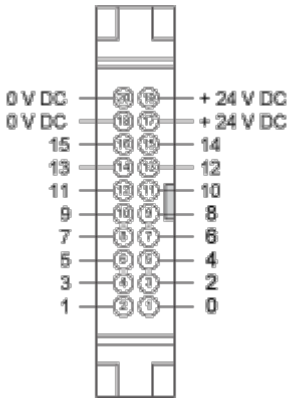

Wiring Diagram

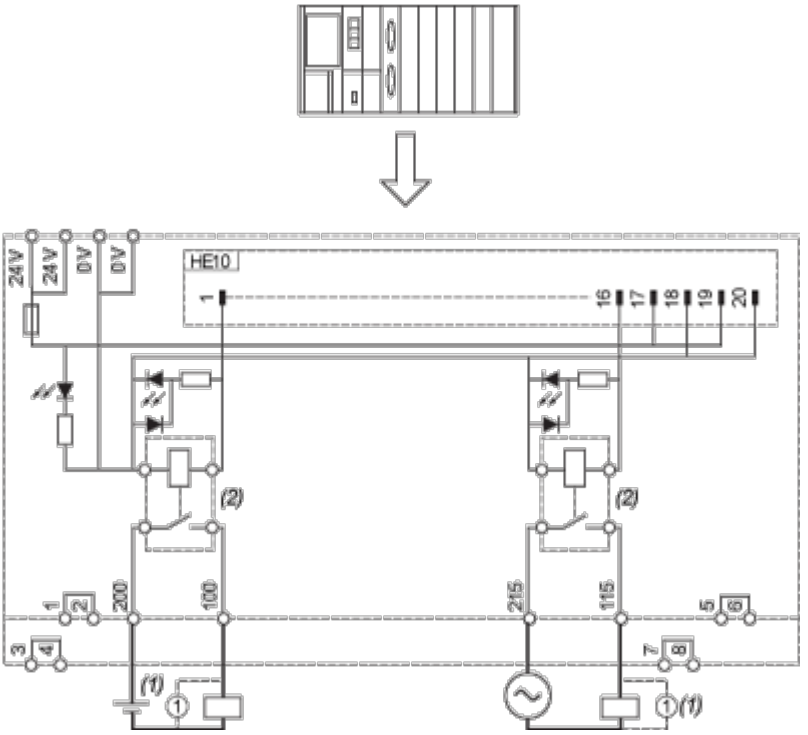

(1) Inductive load

(2) ABR7S21 (1 “F” "SPST") Ith = 5 A (supplied)

Performance Curves

Curves for Determining Cable Type and Length According to the Current

16-channel Sub-base

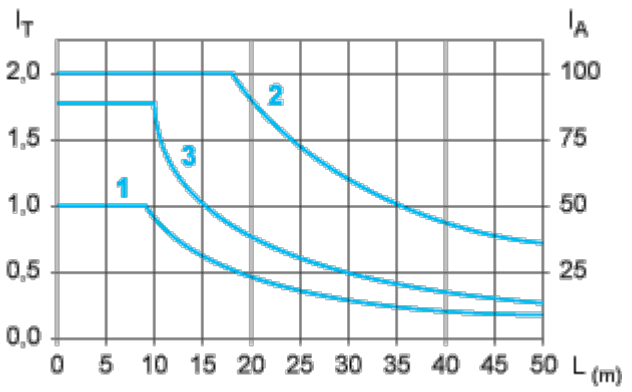

L Cable length

I_T Total current per sub base (A)

I_A Average current per channel (mA)

(1) TSXCDP••2 and ABFH20H••0 cables with c.s.a. 0.08 mm^2 (AWG 28).

(2) TSXCDP••3 cables with c.s.a. 0.34 mm^2 (AWG 22).

(3) Cables with c.s.a. 0.13 mm^2 (AWG 26).

The curves are given for a voltage drop of 1 V in the cable. For n volts tolerance, multiply the length determined from the graph by n.

Temperature Derating Curves

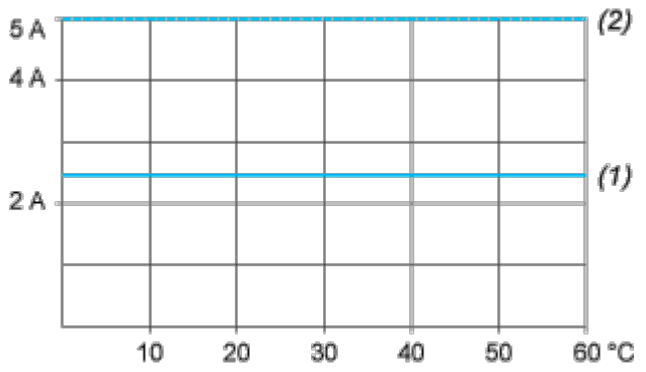

(1) 100 % of channels used

(2) 50 % of channels used

Electrical Durability (in Millions of Operating Cycles) Conforming to IEC 60947-5-1

DC Loads

DC12 curves

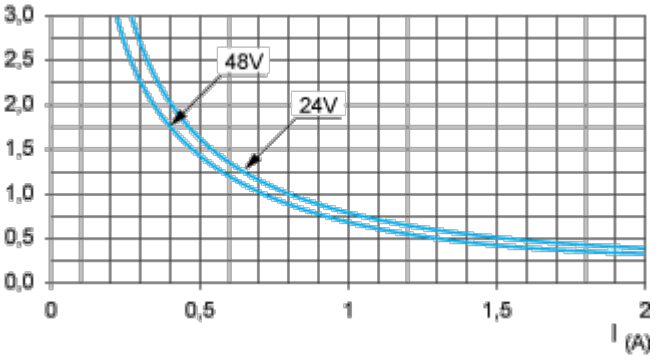

DC12 control of resistive loads and of solid state loads isolated by optocoupler, l/R ≤ 1 ms.

DC13 curves

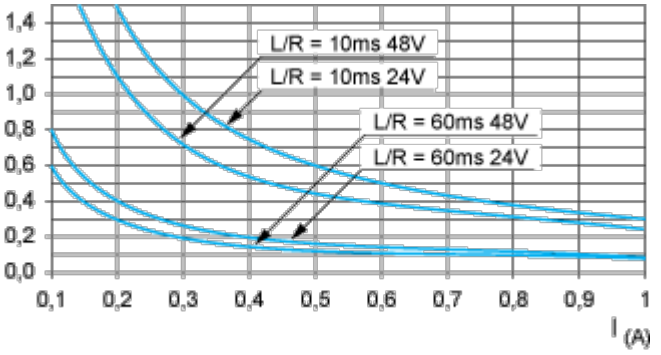

DC13 switching electromagnets, L/R ≤ 2 x (Ue x Ie) in ms, Ue: rated operational voltage, Ie: rated operational current (with a protective diode on the load, DC12 curves must be used with a coefficient of 0.9 applied to the number in millions of operating cycles)

AC Loads

AC12 curves

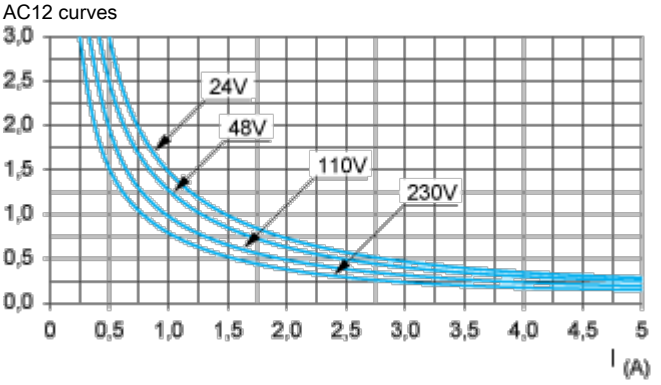

AC12 control of resistive loads and of solid state loads isolated by optocoupler, cos ϕ ≥ 0.9.

AC14 curves

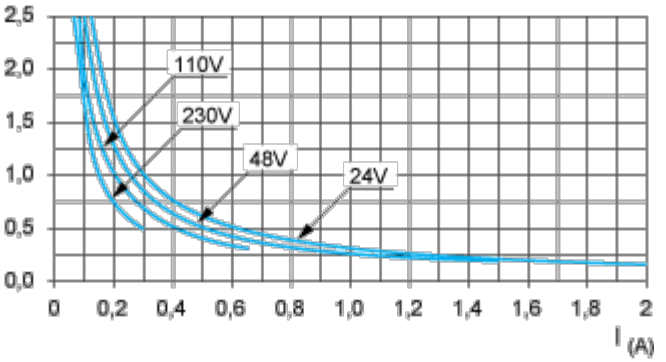

AC14 control of small electromagnetic loads ≤ 72 VA, make: cos ϕ = 0.3, break: cos ϕ = 0.3.

AC15 curves

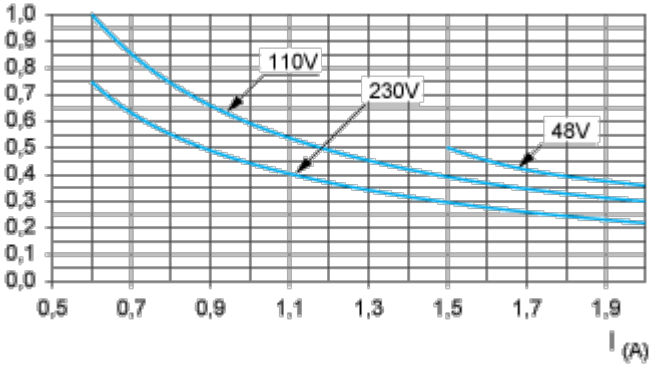

AC15 control of electromagnetic loads > 72 VA, make: cos ϕ = 0.7, break: cos ϕ = 0.4.