Product data sheet

Specifications

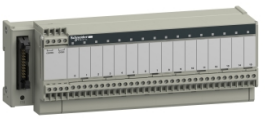

sub-base - soldered electromechanical relays ABE7 - 16 channels - relay 10 mm

ABE7R16S210

Product availability: Non-Stock - Not normally stocked in distribution facility

Price*: 500.00 USD

Main

Range Of Product	Modicon ABE7
Product Or Component Type	Electromechanical output relay sub-base
[Us] Rated Supply Voltage	24 V DC PLC end
Number Of Channels	16
Number Of Terminal Per Channel	2

Complementary

Terminal Block Type	Removable
Polarity Distribution	Volt-free
Fixing Mode	By clips (35 mm symmetrical DIN rail) By screws (solid plate with fixing kit)
Maximum Current Per Output Common	10 A
Current Per Channel	5 A preactuator end
Minimum Switching Current	10 mA >= 5 V
Drop-Out Voltage	2.4 V 68 °F (20 °C) PLC end)
Switching Frequency	<= 0.5 Hz <= 10 Hz
Threshold Tripping Voltage	19.7 V 104 °F (40 °C)
Drop-Out Current	1 mA 68 °F (20 °C)
Maximum Power Dissipation Per Channel In W	0.36 W PLC end)
Contacts Type And Composition	1 NO preactuator end
Maximum Switching Voltage	250 V AC 50/60 Hz IEC 60947-5-1 30 V DC IEC 60947-5-1
Electrical Durability	500000 cycles 600 mA 24 V DC-13 10 ms preactuator end) 500000 cycles 1500 mA 230 V AC-12 preactuator end) 500000 cycles 1500 mA 24 V DC-12 preactuator end) 500000 cycles 900 mA 230 V AC-15 preactuator end)
Electrical Reliability	1e-008
Operating Time	<= 10 ms coil energisation and NO closing <= 5 ms coil de-energisation and NO opening
Contact Bounce Time	<= 5 ms 1 NO
Operating Rate In Hz	10 Hz no load 0.5 Hz at Ie

Price is “List Price” and may be subject to a trade discount – check with your local distributor or retailer for actual price.

Mechanical Durability	20000000 cycles
[Uimp] Rated Impulse Withstand Voltage	2.5 kV IEC 60947-1
[Ui] Rated Insulation Voltage	2000 V
Installation Category	II IEC 60664-1
Tightening Torque	5.31 lbf.in (0.6 N.m) flat Ø 3.5 mm
Width	8.11 in (206 mm)
Net Weight	0.89 lb(US) (0.405 kg)

Environment

Max Immunity To Microbreaks	5 ms
Dielectric Strength	2000 V IEC 60947-1
Product Certifications	GL CSA DNV UL EAC
Ip Degree Of Protection	IP2X conforming to IEC 60529
Protective Treatment	TC
Resistance To Incandescent Wire	1382 °F (750 °C) 30 s IEC 60695-2-11
Shock Resistance	15 gn 11 ms IEC 60068-2-27
Resistance To Radiated Fields	9.14 V/m (10 V/m) 26000000…1000000000 Hz)IEC 61000-4-3 level 3
Resistance To Fast Transients	2 kV level 3 IEC 61000-4-4
Ambient Air Temperature For Operation	23…140 °F (-5…60 °C) IEC 61131-2
Ambient Air Temperature For Storage	-40…176 °F (-40…80 °C) IEC 61131-2
Pollution Degree	2 IEC 60664-1

Ordering and shipping details

Category	US10CP222375
Discount Schedule	0CP2
Gtin	3389110545289
Returnability	No
Country Of Origin	FR

Packing Units

Unit Type Of Package 1	PCE
Number Of Units In Package 1	1
Package 1 Height	2.76 in (7.000 cm)
Package 1 Width	3.23 in (8.200 cm)
Package 1 Length	8.31 in (21.100 cm)
Package 1 Weight	20.49 oz (581.000 g)
Unit Type Of Package 2	S03
Number Of Units In Package 2	15
Package 2 Height	11.81 in (30.000 cm)

Package 2 Width	11.81 in (30.000 cm)
Package 2 Length	15.75 in (40.000 cm)
Package 2 Weight	20.07 lb(US) (9.103 kg)

Contractual warranty

Warranty	18 months

Sustainability

Green Premium™ label is Schneider Electric's commitment to delivering products with best-in-class environmental performance. Green Premium promises compliance with the latest regulations, transparency on environmental impacts, as well as circular and low-CO_2 products.

Guide to assessing product sustainability is a white paper that clarifies global eco-label standards and how to interpret environmental declarations.

Learn more about Green Premium >

Guide to assess a product's sustainability >

Transparency RoHS/REACh

Well-being performance

Mercury Free

Rohs Exemption Information	Yes

Certifications & Standards

Reach Regulation	REACh Declaration
Eu Rohs Directive	Pro-active compliance (Product out of EU RoHS legal scope)
China Rohs Regulation	China RoHS declaration
Environmental Disclosure	Product Environmental Profile
Weee	The product must be disposed on European Union markets following specific waste collection and never end up in rubbish bins.
Circularity Profile	End of Life Information
California Proposition 65	WARNING: This product can expose you to chemicals including: Lead and lead compounds, which is known to the State of California to cause cancer and birth defects or other reproductive harm. For more information go to www.P65Warnings.ca.gov

Dimensions Drawings

Dimensions

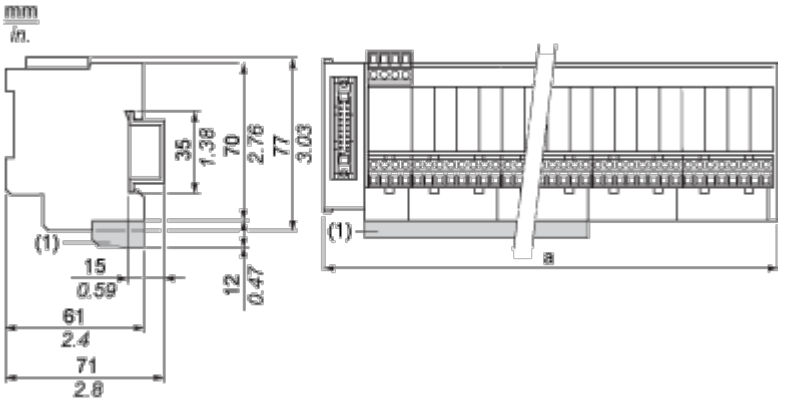

(1) ABE7BV20 / ABE7BV20E

ABE7	a in mm	a in in.
R16S111 / R16S111E	125	4.92
R16S21 / R16S21•E	206	8.11

Mounting and Clearance

Mounting

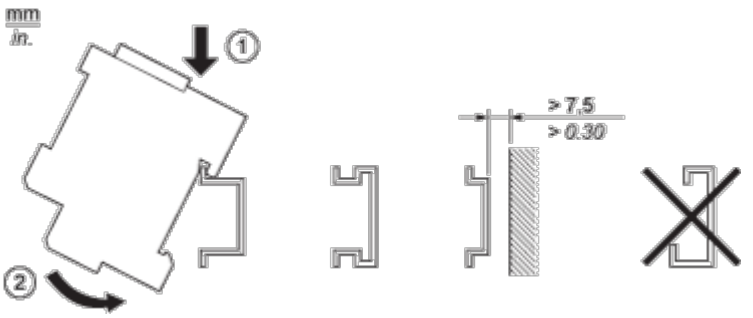

Connections and Schema

HE10 16 Channels

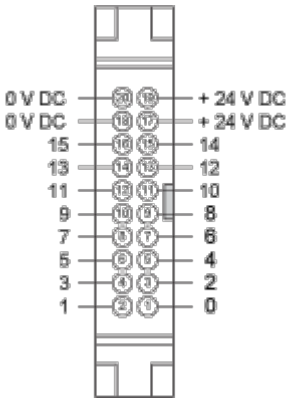

Wiring Diagram

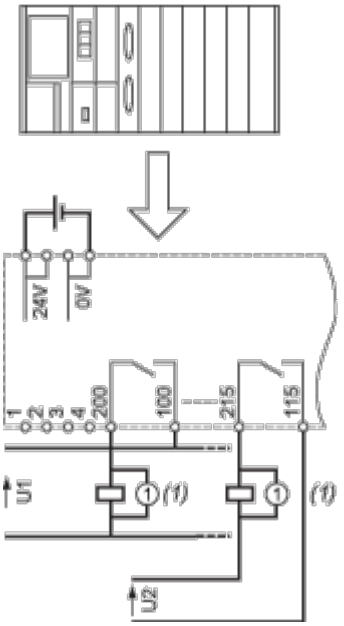

(1) Inductive load

Performance Curves

Curves for Determining Cable Type and Length According to the Current

16-channel Sub-base

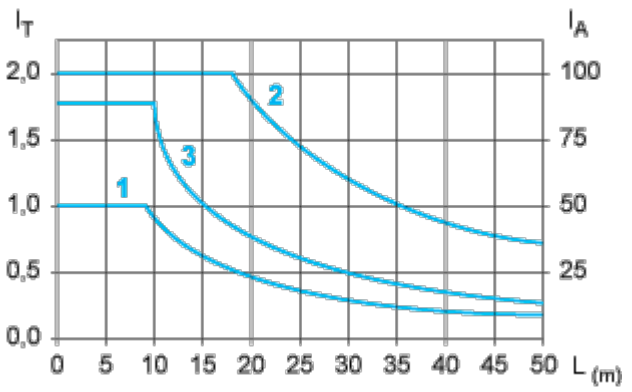

L Cable length

I_T Total current per sub base (A)

I_A Average current per channel (mA)

(1) TSXCDP••2 and ABFH20H••0 cables with c.s.a. 0.08 mm^2 (AWG 28).

(2) TSXCDP••3 cables with c.s.a. 0.34 mm^2 (AWG 22).

(3) Cables with c.s.a. 0.13 mm^2 (AWG 26).

The curves are given for a voltage drop of 1 V in the cable. For n volts tolerance, multiply the length determined from the graph by n.

Electrical Durability (in Millions of Operating Cycles) Conforming to IEC 60947-5-1

DC Loads

DC12 curves

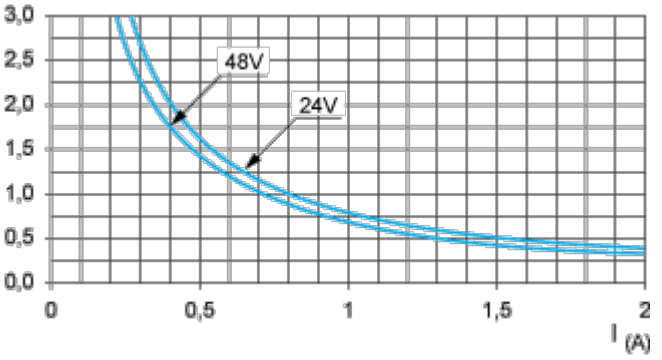

DC12 control of resistive loads and of solid state loads isolated by optocoupler, l/R ≤ 1 ms.

DC13 curves

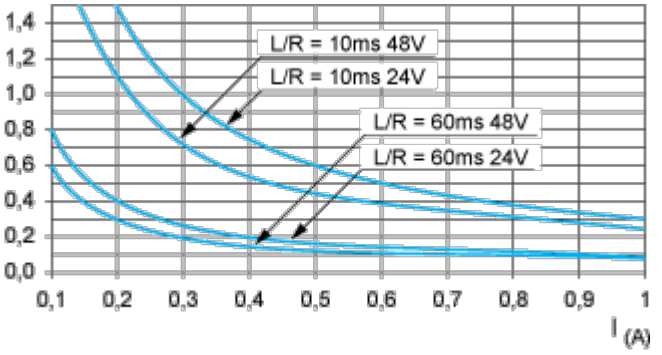

DC13 switching electromagnets, L/R ≤ 2 x (Ue x Ie) in ms, Ue: rated operational voltage, Ie: rated operational current (with a protective diode on the load, DC12 curves must be used with a coefficient of 0.9 applied to the number in millions of operating cycles)

AC Loads

AC12 curves

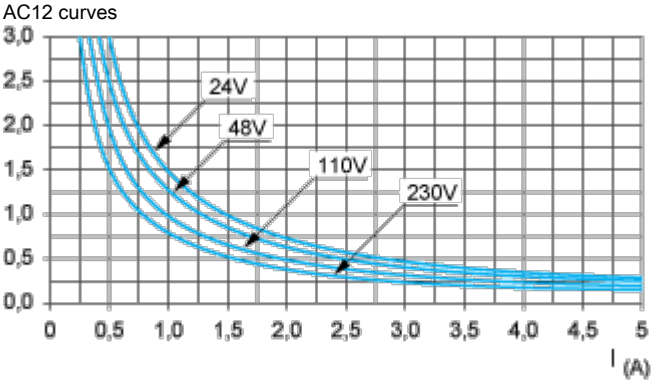

AC12 control of resistive loads and of solid state loads isolated by optocoupler, cos ϕ ≥ 0.9.

AC14 curves

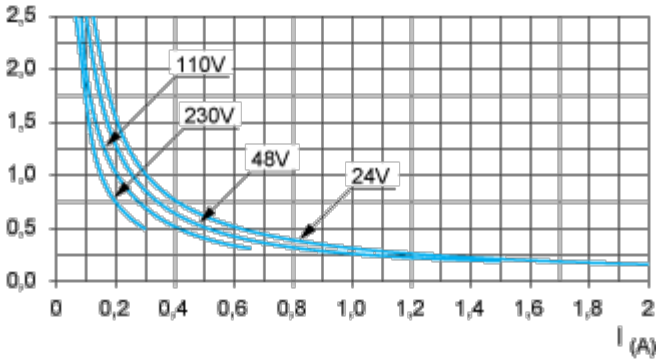

AC14 control of small electromagnetic loads ≤ 72 VA, make: cos ϕ = 0.3, break: cos ϕ = 0.3.

AC15 curves

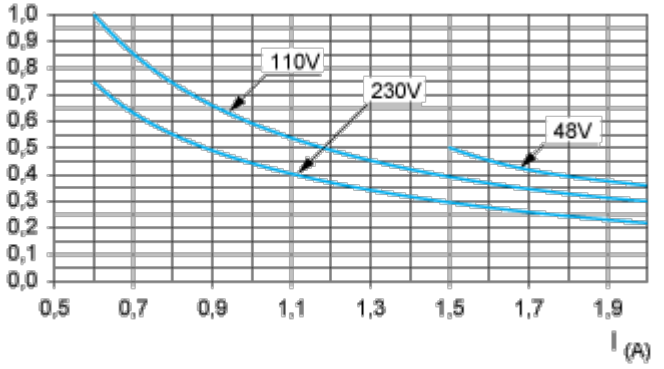

AC15 control of electromagnetic loads > 72 VA, make: cos ϕ = 0.7, break: cos ϕ = 0.4.