Product data sheet

Specifications

Green Premium™

passive connection sub-base ABE7 - 12 inputs or outputs - Led - isolator

ABE7H12S21

Discontinued

Main

Range Of Product	Modicon ABE7
Product Or Component Type	Passive discrete I/O sub-base
Sub-Base Type	I/O sub-base
[Us] Rated Supply Voltage	19...30 V IEC 61131-2
Number Of Channels	12
Number Of Terminal Per Channel	2
Connections - Terminals	Screw type terminals, 1 x 0.09...1 x 1.5 mm² AWG 28...AWG 16) flexible with cable end Screw type terminals, 1 x 0.14...1 x 2.5 mm² AWG 26...AWG 12) solid Screw type terminals, 1 x 0.14...1 x 2.5 mm² AWG 26...AWG 14) flexible without cable end Screw type terminals, 2 x 0.09...2 x 0.75 mm² AWG 28...AWG 20) flexible with cable end Screw type terminals, 2 x 0.2...2 x 2.5 mm² AWG 24...AWG 14) solid
Channel Additional Information	1 switch disconnector per channel

Complementary

Supply Voltage Type	DC
Number Of Horizontal Rows	2
Status Led	1 LED per channel (Green) channel status 1 LED (Green) power ON
Polarity Distribution	0 V or 24 V
Short-Circuit Protection	6.3 A internal fuse, 5 x 20 mm, fast blow PLC end)
Connector Type	HE-10
Pin Number	20 pins
Fixing Mode	By clips (35 mm symmetrical DIN rail) By screws (solid plate with fixing kit)
Maximum Supply Current	6.1 A
Current Per Channel	0.5 A
Maximum Current Per Output Common	6.1 A
Voltage Drop On Power Supply Fuse	0.2 V
[Ui] Rated Insulation Voltage	2000 V
Installation Category	II IEC 60664-1
Tightening Torque	5.31 lbf.in (0.6 N.m) flat Ø 3.5 mm

Price is “List Price” and may be subject to a trade discount – check with your local distributor or retailer for actual price.

Disclaimer: This documentation is not intended as a substitute for and is not to be used for determining suitability or reliability of these products for specific user applications

Width	4.92 in (125 mm)
Net Weight	0.83 lb(US) (0.375 kg)

Environment

Product Certifications	UL DNV CSA GL
Ip Degree Of Protection	IP2X conforming to IEC 60529
Resistance To Incandescent Wire	1382 °F (750 °C) IEC 60695-2-11
Shock Resistance	15 gn 11 ms IEC 60068-2-27
Vibration Resistance	2 gn 10…150 Hz)IEC 60068-2-6
Resistance To Electrostatic Discharge	4 kV contact) level 3 IEC 61000-4-2 8 kV air) level 3 IEC 61000-4-2
Resistance To Radiated Fields	9.14 V/m (10 V/m) 26000000…1000000000 Hz)IEC 61000-4-3 level 3
Resistance To Fast Transients	2 kV level 3 IEC 61000-4-4
Ambient Air Temperature For Operation	23…140 °F (-5…60 °C) IEC 61131-2
Ambient Air Temperature For Storage	-40…176 °F (-40…80 °C) IEC 61131-2
Pollution Degree	2 IEC 60664-1

Ordering and shipping details

Category	22375-INTERFACE MODULE(ABA,R,S)
Discount Schedule	CP2
Gtin	3389110644487
Returnability	No

Packing Units

Unit Type Of Package 1	PCE
Number Of Units In Package 1	1

Contractual warranty

Warranty	18 months

Sustainability

Green Premium™ label is Schneider Electric's commitment to delivering products with best-in-class environmental performance. Green Premium promises compliance with the latest regulations, transparency on environmental impacts, as well as circular and low-CO_2 products.

Guide to assessing product sustainability is a white paper that clarifies global eco-label standards and how to interpret environmental declarations.

Learn more about Green Premium >

Guide to assess a product's sustainability >

Transparency RoHS/REACh

Well-being performance

Mercury Free

Rohs Exemption Information	Yes

Certifications & Standards

Reach Regulation	REACh Declaration
Eu Rohs Directive	Pro-active compliance (Product out of EU RoHS legal scope)
China Rohs Regulation	China RoHS declaration
Environmental Disclosure	Product Environmental Profile
Weee	The product must be disposed on European Union markets following specific waste collection and never end up in rubbish bins.
Circularity Profile	End of Life Information
California Proposition 65	WARNING: This product can expose you to chemicals including: Lead and lead compounds, which is known to the State of California to cause cancer and birth defects or other reproductive harm. For more information go to www.P65Warnings.ca.gov

Dimensions Drawings

Dimensions

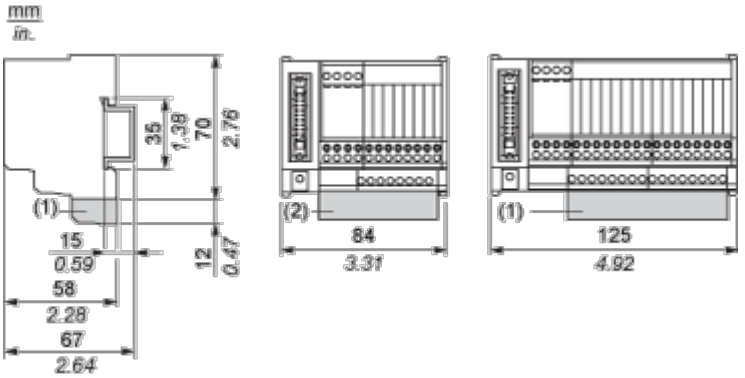

(1) ABE7BV10 / BV20, ABE7BV10E / BV20E

(2) ABE7BV10, ABE7BV10E

Mounting and Clearance

Mounting

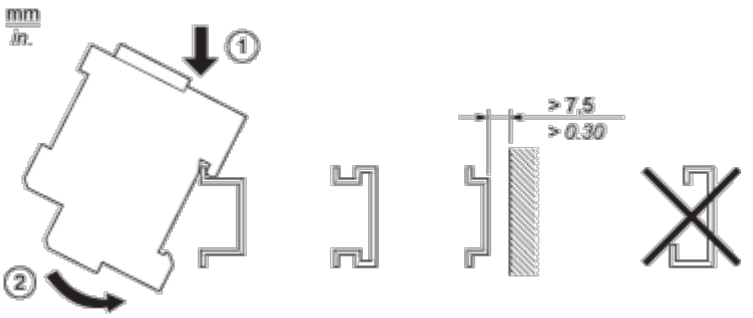

Connections and Schema

HE10 8/12 Channels

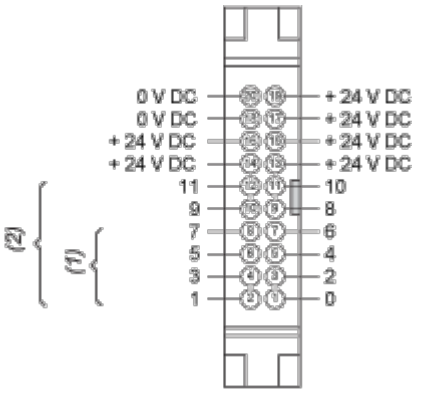

(1) 8 channels

(2) 12 channels

Wiring Diagram

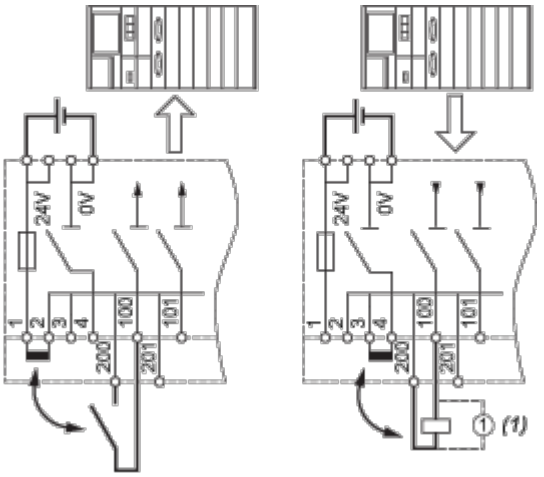

(1) Inductive load

Performance Curves

Curves for Determining Cable Type and Length According to the Current

12-channel Sub-base

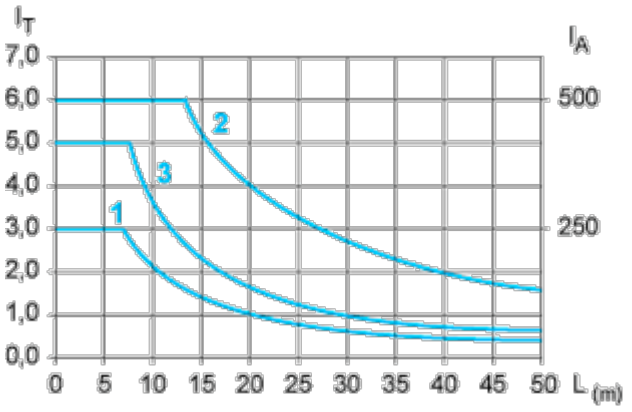

L Cable length

I_T Total current per sub base (A)

I_A Average current per channel (mA)

(1) TSXCDP••2 and ABFH20H••0 cables with c.s.a. 0.08 mm^2 (AWG 28).

(2) TSXCDP••3 cables with c.s.a. 0.34 mm^2 (AWG 22).

(3) Cables with c.s.a. 0.13 mm^2 (AWG 26).

The curves are given for a voltage drop of 1 V in the cable. For n volts tolerance, multiply the length determined from the graph by n.