Product data sheet

Specifications

Green Premium™

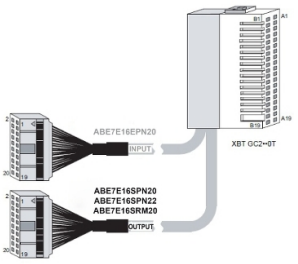

connection sub-base ABE7 - for Twido extension - 16 outputs

ABE7E16SPN20

Discontinued on: Dec 1, 2020

Discontinued

Product availability: Non-Stock - Not normally stocked in distribution facility

Main

Range Of Product	Modicon ABE7
Product Or Component Type	Passive discrete I/O sub-base
[Us] Rated Supply Voltage	24 V DC controller side 24 V DC sensor/controller side
Number Of Channels	16
Number Of Terminal Per Channel	2
Connections - Terminals	Screw type terminals, 1 x 0.09...1 x 1.5 mm² AWG 28...AWG 16) flexible with cable end Screw type terminals, 1 x 0.14...1 x 2.5 mm² AWG 26...AWG 12) solid Screw type terminals, 1 x 0.14...1 x 2.5 mm² AWG 26...AWG 14) flexible without cable end Screw type terminals, 2 x 0.09...2 x 0.75 mm² AWG 28...AWG 20) flexible with cable end Screw type terminals, 2 x 0.2...2 x 2.5 mm² AWG 28...AWG 16) solid
Connector Destination	Twido programmable controller

Complementary

Supply Voltage Limits	19…30 V DC controller side)IEC 61131-2 20.4…28.8 V DC sensor/controller side)IEC 61131-2
Discrete Output Number	16
Discrete Output Logic	Source
Discrete Output Voltage	24 V
Discrete Output Voltage Type	DC
Product Compatibility	TWDDDO32TK TWDDDO16TK
Status Led	1 LED power ON
Polarity Distribution	1 common/16 channels output
Short-Circuit Protection	2 A internal fuse, 5 x 20 mm, fast blow controller side)
Connector Type	HE-10
Pin Number	20 pins
Fixing Mode	By clips 35 mm symmetrical DIN rail IEC 60715 By screws
Maximum Supply Current	2 A
Switched Current	100 mA output circuit
Maximum Current Per Output Common	1.6 A

Price is “List Price” and may be subject to a trade discount – check with your local distributor or retailer for actual price.

Disclaimer: This documentation is not intended as a substitute for and is not to be used for determining suitability or reliability of these products for specific user applications

Voltage Drop On Power Supply Fuse	0.3 V
[Ui] Rated Insulation Voltage	2000 V terminals/mounting rails
Overvoltage Category	II IEC 60664-1
Tightening Torque	5.31 lbf.in (0.6 N.m) flat Ø 3.5 mm
Net Weight	0.99 lb(US) (0.45 kg)

Environment

Product Certifications	UL CSA
Ip Degree Of Protection	IP2X conforming to IEC 60529
Resistance To Incandescent Wire	1382 °F (750 °C) IEC 60695-2-11
Shock Resistance	15 gn 11 ms IEC 60068-2-27
Vibration Resistance	2 gn 10…150 Hz)IEC 60068-2-6
Resistance To Electrostatic Discharge	4 kV contact) level 3 IEC 61000-4-2 8 kV air) level 3 IEC 61000-4-2
Resistance To Radiated Fields	9.14 V/m (10 V/m) 80000000…2000000000 Hz)IEC 61000-4-3 level 3
Resistance To Fast Transients	2 kV level 3 IEC 61000-4-4
Ambient Air Temperature For Operation	23…140 °F (-5…60 °C) IEC 61131-2
Ambient Air Temperature For Storage	-40…176 °F (-40…80 °C) IEC 61131-2
Pollution Degree	2 IEC 60664-1

Ordering and shipping details

Category	US10CP222375
Discount Schedule	0CP2
Gtin	3389110590333
Returnability	No
Country Of Origin	LV

Packing Units

Unit Type Of Package 1	PCE
Number Of Units In Package 1	1
Package 1 Height	2.76 in (7.000 cm)
Package 1 Width	3.23 in (8.200 cm)
Package 1 Length	5.39 in (13.700 cm)
Package 1 Weight	6.88 oz (195.000 g)
Unit Type Of Package 2	S03
Number Of Units In Package 2	16
Package 2 Height	11.81 in (30.000 cm)
Package 2 Width	11.81 in (30.000 cm)
Package 2 Length	15.75 in (40.000 cm)
Package 2 Weight	8.46 lb(US) (3.836 kg)

Contractual warranty

Warranty	18 months

Sustainability

Green Premium™ label is Schneider Electric's commitment to delivering products with best-in-class environmental performance. Green Premium promises compliance with the latest regulations, transparency on environmental impacts, as well as circular and low-CO_2 products.

Guide to assessing product sustainability is a white paper that clarifies global eco-label standards and how to interpret environmental declarations.

Learn more about Green Premium >

Guide to assess a product's sustainability >

Transparency RoHS/REACh

Well-being performance

Mercury Free

Rohs Exemption Information	Yes

Certifications & Standards

Reach Regulation	REACh Declaration
Eu Rohs Directive	Pro-active compliance (Product out of EU RoHS legal scope)
China Rohs Regulation	China RoHS declaration
Environmental Disclosure	Product Environmental Profile
Weee	The product must be disposed on European Union markets following specific waste collection and never end up in rubbish bins.
Circularity Profile	End of Life Information
California Proposition 65	WARNING: This product can expose you to chemicals including: Lead and lead compounds, which is known to the State of California to cause cancer and birth defects or other reproductive harm. For more information go to www.P65Warnings.ca.gov

Dimensions Drawings

Dimensions

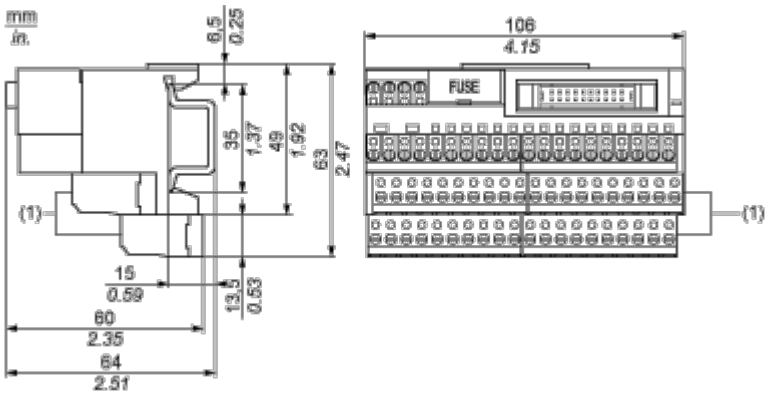

(1) ABE7BV10 / BV20 / BV20TB

Mounting and Clearance

Mounting

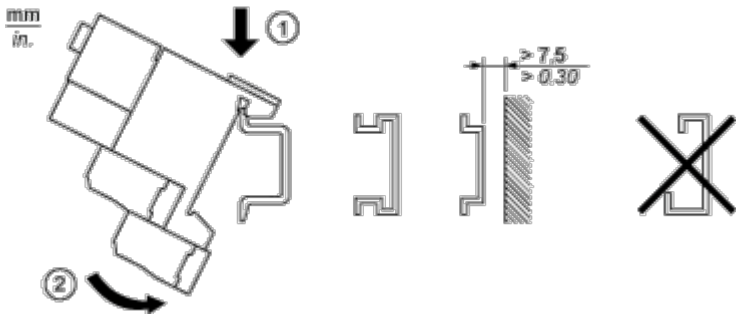

Connections and Schema

HE10 16 Channels

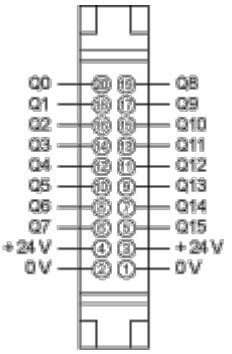

Wiring Diagram

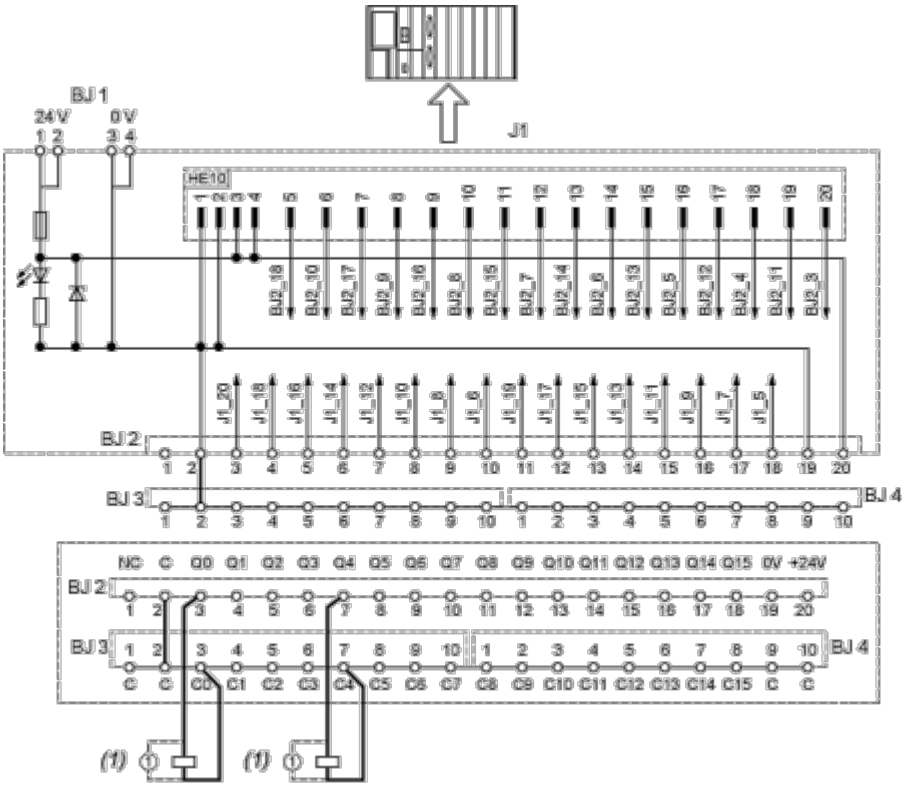

(1) Inductive load

Performance Curves

Curves for Determining Cable Type and Length According to the Current

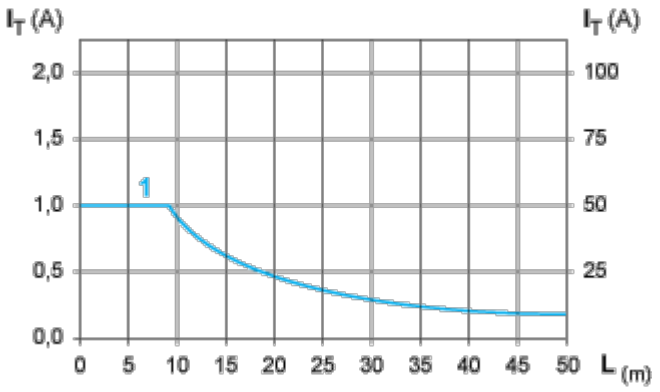

L Cable length

I_T Total current per sub base (A)

I_A Average current per channel (mA)

(1) Cables ABFT2••••• c.s.a. 0.08 mm^2 (AWG 28)

The curves are given for a voltage drop of 1 V in the cable. For n volts tolerance, multiply the length determined from the graph by n.