Product data sheet

Specifications

connection sub-base ABE7 - for passive distribution of 8 channels

ABE7CPA02

Product availability: Stock - Normally stocked in distribution facility

Price*: 230.00 USD

Main

Range Of Product	Modicon ABE7
Product Or Component Type	Connection sub-base for counter and analogue channels
Number Of Channels	8
Connections - Terminals	Screw type terminals, 1 x 0.09...1 x 1.5 mm² AWG 28...AWG 16) flexible with cable end Screw type terminals, 1 x 0.14...1 x 2.5 mm² AWG 26...AWG 12) solid Screw type terminals, 1 x 0.14...1 x 2.5 mm² AWG 26...AWG 14) flexible without cable end Screw type terminals, 2 x 0.09...2 x 0.75 mm² AWG 28...AWG 20) flexible with cable end Screw type terminals, 2 x 0.2...2 x 2.5 mm² AWG 24...AWG 14) solid

Complementary

Function Of Module	Analogue input current Premium Analogue input voltage Premium Pt 100 Premium
Connection To Plc	SUB-D 25
Fixing Mode	By clips (35 mm symmetrical DIN rail) By screws (solid plate with fixing kit)
[Ui] Rated Insulation Voltage	2000 V terminals/mounting rails
Installation Category	II IEC 60664-1
Tightening Torque	5.31 lbf.in (0.6 N.m) flat Ø 3.5 mm
Net Weight	0.64 lb(US) (0.29 kg)

Environment

Product Certifications	GL DNV UL CSA EAC
Ip Degree Of Protection	IP20 conforming to IEC 60529
Protective Treatment	TC
Resistance To Incandescent Wire	1382 °F (750 °C) 30 s IEC 60695-2-11
Shock Resistance	15 gn 11 ms IEC 60068-2-27
Vibration Resistance	2 gn 10…150 Hz)IEC 60068-2-6
Resistance To Electrostatic Discharge	4 kV contact) level 3 IEC 61000-4-2 8 kV air) level 3 IEC 61000-4-2
Resistance To Radiated Fields	9.14 V/m (10 V/m) 26000000…1000000000 Hz)IEC 61000-4-3 level 3

Price is “List Price” and may be subject to a trade discount – check with your local distributor or retailer for actual price.

Disclaimer: This documentation is not intended as a substitute for and is not to be used for determining suitability or reliability of these products for specific user applications

Resistance To Fast Transients	2 kV level 3 IEC 61000-4-4
Ambient Air Temperature For Operation	32…140 °F (0…60 °C) IEC 61131-2
Ambient Air Temperature For Storage	-40…176 °F (-40…80 °C) IEC 61131-2
Pollution Degree	2 IEC 60664-1

Ordering and shipping details

Category	US10CP222375
Discount Schedule	0CP2
Gtin	3389110644463
Returnability	Yes
Country Of Origin	LV

Packing Units

Unit Type Of Package 1	PCE
Number Of Units In Package 1	1
Package 1 Height	2.80 in (7.100 cm)
Package 1 Width	3.23 in (8.200 cm)
Package 1 Length	5.35 in (13.600 cm)
Package 1 Weight	10.62 oz (301.000 g)
Unit Type Of Package 2	S03
Number Of Units In Package 2	27
Package 2 Height	11.81 in (30.000 cm)
Package 2 Width	11.81 in (30.000 cm)
Package 2 Length	15.75 in (40.000 cm)
Package 2 Weight	19.14 lb(US) (8.683 kg)

Contractual warranty

Warranty	18 months

Sustainability

Green Premium™ label is Schneider Electric's commitment to delivering products with best-in-class environmental performance. Green Premium promises compliance with the latest regulations, transparency on environmental impacts, as well as circular and low-CO_2 products.

Guide to assessing product sustainability is a white paper that clarifies global eco-label standards and how to interpret environmental declarations.

Learn more about Green Premium >

Guide to assess a product's sustainability >

Transparency RoHS/REACh

Well-being performance

Mercury Free

Rohs Exemption Information	Yes

Certifications & Standards

Reach Regulation	REACh Declaration
Eu Rohs Directive	Pro-active compliance (Product out of EU RoHS legal scope)
China Rohs Regulation	China RoHS declaration
Environmental Disclosure	Product Environmental Profile
Weee	The product must be disposed on European Union markets following specific waste collection and never end up in rubbish bins.
Circularity Profile	End of Life Information
California Proposition 65	WARNING: This product can expose you to chemicals including: Lead and lead compounds, which is known to the State of California to cause cancer and birth defects or other reproductive harm. For more information go to www.P65Warnings.ca.gov

Dimensions Drawings

Dimensions

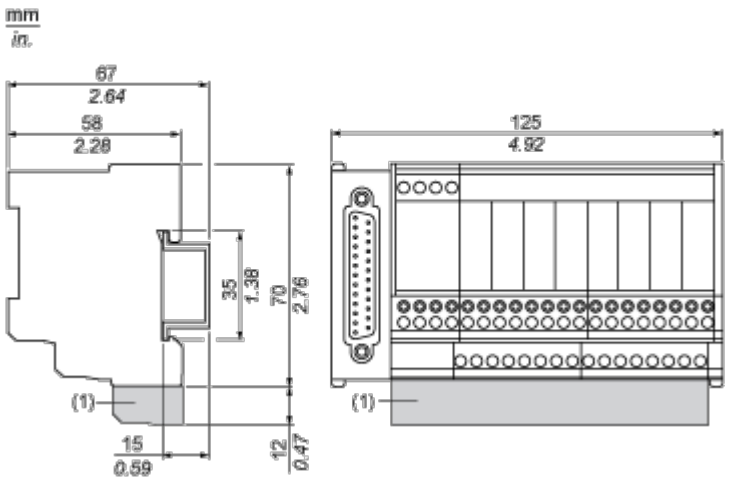

(1) ABE7BV20 / ABE7BV20E

Mounting and Clearance

Mounting

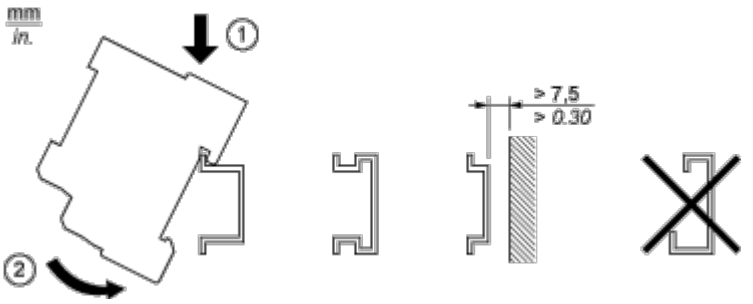

Connections and Schema

Wiring Diagram

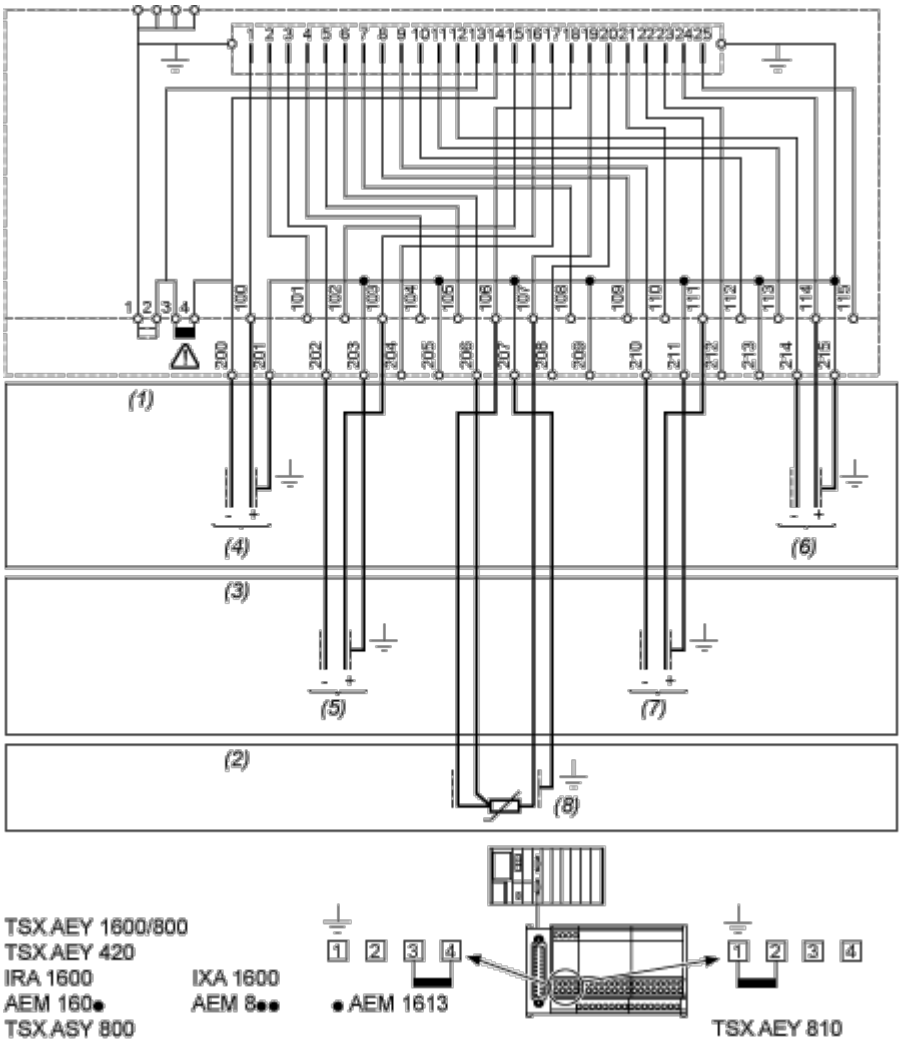

(1) 8 input voltage - 8 output voltage

(2) 8 input probe PT100

(3) 8 input current - 8 output current

(4) Channel via 1

(5) Channel via 2

(6) Channel via 8

(7) Channel via 6

(8) Channel via 4