# Product data sheet

Specifications

Green Premium™ Schneider Electric ABE7CPA01

Picture

## connection sub-base ABE7 - for counter and analog channels

ABE7CPA01

**Product availability: Non-Stock - Not normally stocked in distribution facility**

**Price*: 345.00 USD**

## Main

| | |
|---|---|
| **Range Of Product** | Modicon ABE7 |
| **Product Or Component Type** | Connection sub-base for counter and analogue channels |
| **Number Of Channels** | 2<br>8<br>1 |
| **Connections - Terminals** | Screw type terminals, 1 x 0.09...1 x 1.5 mm² AWG 28...AWG 16) flexible with cable end<br>Screw type terminals, 1 x 0.14...1 x 2.5 mm² AWG 26...AWG 12) solid<br>Screw type terminals, 1 x 0.14...1 x 2.5 mm² AWG 26...AWG 14) flexible without cable end<br>Screw type terminals, 2 x 0.09...2 x 0.75 mm² AWG 28...AWG 20) flexible with cable end<br>Screw type terminals, 2 x 0.2...2 x 2.5 mm² AWG 24...AWG 14) solid |

## Complementary

| | |
|---|---|
| **Function Of Module** | Counting and analogue TSX Micro<br>Counting, axis control, position control Premium |
| **Product Compatibility** | TSX Micro TSX3722<br>Premium TSXCAY21<br>Premium TSXCAY41<br>Premium TSXCTY2A<br>Premium TSXCTY4A<br>TSX Micro TSXCTZ1A<br>TSX Micro TSXCTZ2A |
| **[Uc] Control Circuit Voltage** | 24 V DC |
| **Connection To Plc** | SUB-D 15 |
| **Fixing Mode** | By clips (35 mm symmetrical DIN rail)<br>By screws (solid plate with fixing kit) |
| **[Ui] Rated Insulation Voltage** | 2000 V terminals/mounting rails |
| **Installation Category** | II IEC 60664-1 |
| **Tightening Torque** | 5.31 lbf.in (0.6 N.m) flat Ø 3.5 mm |
| **Net Weight** | 0.66 lb(US) (0.3 kg) |

## Environment

| | |
|---|---|
| **Product Certifications** | DNV<br>CSA<br>UL<br>GL<br>EAC |
| **Ip Degree Of Protection** | IP20 conforming to IEC 60529 |

Price is “List Price” and may be subject to a trade discount – check with your local distributor or retailer for actual price.

Disclaimer: This documentation is not intended as a substitute for and is not to be used for determining suitability or reliability of these products for specific user applications

| | |
|---|---|
| **Resistance To Incandescent Wire** | 1382 °F (750 °C) IEC 60695-2-11 |
| **Shock Resistance** | 15 gn 11 ms IEC 60068-2-27 |
| **Vibration Resistance** | 2 gn 10…150 Hz)IEC 60068-2-6 |
| **Resistance To Electrostatic Discharge** | 4 kV contact) level 3 IEC 61000-4-2<br>8 kV air) level 3 IEC 61000-4-2 |
| **Resistance To Radiated Fields** | 9.14 V/m (10 V/m) 26000000…1000000000 Hz)IEC 61000-4-3 level 3 |
| **Resistance To Fast Transients** | 2 kV level 3 IEC 61000-4-4 |
| **Ambient Air Temperature For Operation** | 32…140 °F (0…60 °C) |
| **Ambient Air Temperature For Storage** | -40…176 °F (-40…80 °C) IEC 61131-2 |
| **Pollution Degree** | 2 IEC 60664-1 |

## Ordering and shipping details

| | |
|---|---|
| **Category** | US10CP222375 |
| **Discount Schedule** | 0CP2 |
| **Gtin** | 3389110544848 |
| **Returnability** | No |
| **Country Of Origin** | ID |

## Packing Units

| | |
|---|---|
| **Unit Type Of Package 1** | PCE |
| **Number Of Units In Package 1** | 1 |
| **Package 1 Height** | 2.56 in (6.5 cm) |
| **Package 1 Width** | 3.03 in (7.7 cm) |
| **Package 1 Length** | 6.18 in (15.7 cm) |
| **Package 1 Weight** | 11.46 oz (325.0 g) |
| **Unit Type Of Package 2** | S03 |
| **Number Of Units In Package 2** | 24 |
| **Package 2 Height** | 11.81 in (30.0 cm) |
| **Package 2 Width** | 11.81 in (30.0 cm) |
| **Package 2 Length** | 15.75 in (40.0 cm) |
| **Package 2 Weight** | 18.41 lb(US) (8.352 kg) |

## Contractual warranty

| | |
|---|---|
| **Warranty** | 18 months |

## Sustainability

**Green Premium™ label** is Schneider Electric's commitment to delivering products with best-in-class environmental performance. Green Premium promises compliance with the latest regulations, transparency on environmental impacts, as well as circular and low-$CO_2$ products.

**Guide to assessing product sustainability** is a white paper that clarifies global eco-label standards and how to interpret environmental declarations.

Learn more about Green Premium >

Guide to assess a product's sustainability >

Transparency RoHS/REACh

## Well-being performance

Mercury Free

| | |
|---|---|
| Rohs Exemption Information | Yes |

## Certifications & Standards

| | |
|---|---|
| **Reach Regulation** | REACh Declaration |
| **Eu Rohs Directive** | Pro-active compliance (Product out of EU RoHS legal scope) |
| **China Rohs Regulation** | China RoHS declaration |
| **Environmental Disclosure** | Product Environmental Profile |
| **Weee** | The product must be disposed on European Union markets following specific waste collection and never end up in rubbish bins. |
| **Circularity Profile** | End of Life Information |
| **California Proposition 65** | WARNING: This product can expose you to chemicals including: Lead and lead compounds, which is known to the State of California to cause cancer and birth defects or other reproductive harm. For more information go to www.P65Warnings.ca.gov |

Dimensions Drawings

## Dimensions

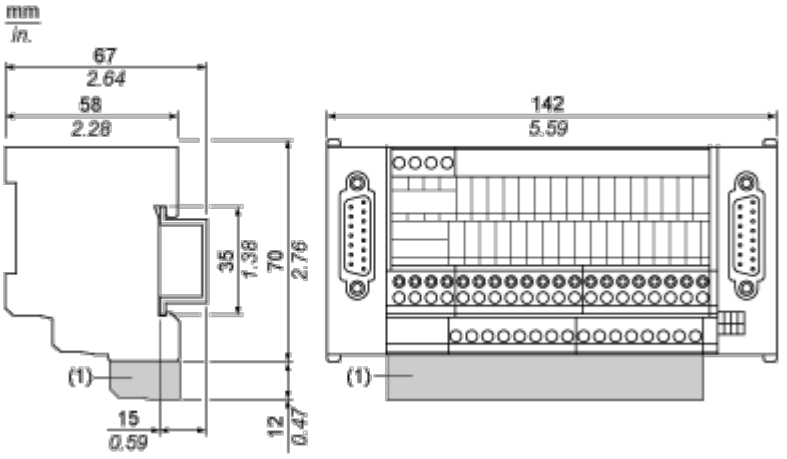


(1) ABE7BV10 / ABE7BV20

Mounting and Clearance

## Mounting

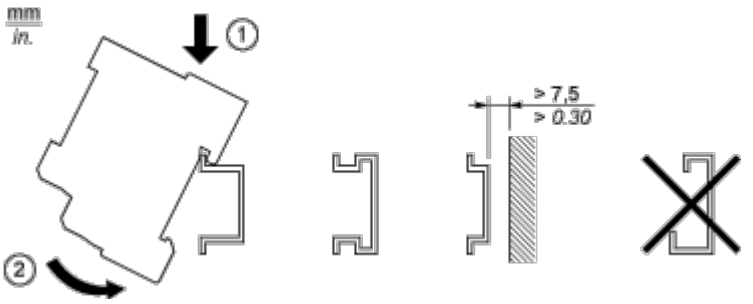

Connections and Schema
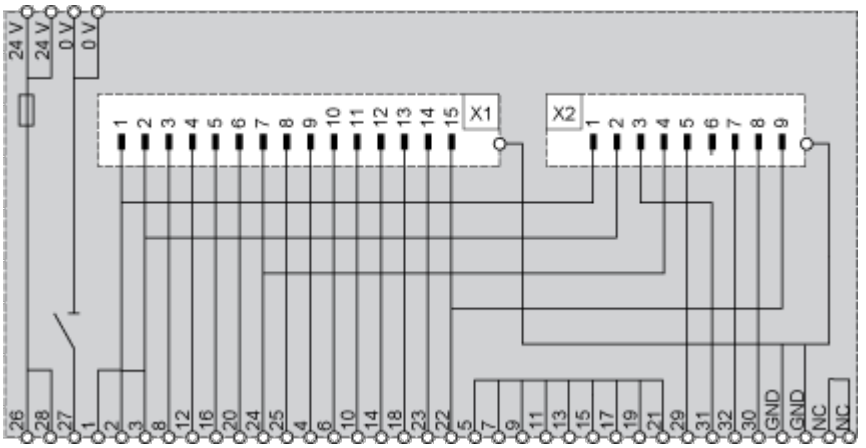
**Wiring Diagram**