Product data sheet

Specifications

Industrial control transformer, Type TF, 1 phase, 100VA, 240x480V primary, 120V secondary, 50/60Hz

9070TF100D1

Product availability: Stock - Normally stocked in distribution facility

Price*: 242.00 USD

Main

Product Or Component Type	Industrial Control Transformer
Type	TF

Complementary

Number Of Phases	1 phase
Power Rating	100 VA UL 100 VA CSA 100 VA NOM 100 VA CE
Primary To Secondary Voltage	240 x 480 V 120 V 230 x 460 V 115 V 220 x 440 V 110 V
Fuse Type	0.41 x 1.50 in CC top
Temperature Rise	55 °C
Electrical Connection	Screw clamp terminals
Height	4.25 in (107.95 mm)
Width	3.38 in (85.85 mm)
Depth	3.34 in (84.84 mm)
Material	Copper: winding
Fingersafe Cover Compatibility	FSC1

Environment

Product Certifications	UL listed file E61239 CSA file LR37055 guide 184-N-90
Enclosure Type	Not rated (open device)
Insulation Temperature	221 °F (105 °C)

Ordering and shipping details

Category	US10CP816202
Discount Schedule	0CP8
Gtin	785901904786
Returnability	Yes
Country Of Origin	MX

Price is “List Price” and may be subject to a trade discount – check with your local distributor or retailer for actual price.

Disclaimer: This documentation is not intended as a substitute for and is not to be used for determining suitability or reliability of these products for specific user applications

Packing Units

Unit Type Of Package 1	PCE
Number Of Units In Package 1	1
Package 1 Height	6.40 in (16.256 cm)
Package 1 Width	6.70 in (17.018 cm)
Package 1 Length	7.80 in (19.812 cm)
Package 1 Weight	4.60 lb(US) (2.087 kg)

Contractual warranty

Warranty	18 months

Sustainability

Green Premium™ label is Schneider Electric's commitment to delivering products with best-in-class environmental performance. Green Premium promises compliance with the latest regulations, transparency on environmental impacts, as well as circular and low-CO_2 products.

Guide to assessing product sustainability is a white paper that clarifies global eco-label standards and how to interpret environmental declarations.

Learn more about Green Premium >

Guide to assess a product's sustainability >

Transparency RoHS/REACh

Well-being performance

Mercury Free	
Rohs Exemption Information	Yes
Pvc Free	

Certifications & Standards

Reach Regulation	REACh Declaration
Eu Rohs Directive	Compliant with Exemptions
China Rohs Regulation	China RoHS declaration Product out of China RoHS scope. Substance declaration for your information.
Environmental Disclosure	Product Environmental Profile
Circularity Profile	No need of specific recycling operations
California Proposition 65	WARNING: This product can expose you to chemicals including: Phenyl glycidyl ether, which is known to the State of California to cause cancer and birth defects or other reproductive harm. For more information go to www.P65Warnings.ca.gov

Dimensions Drawings

Approximate Dimensions

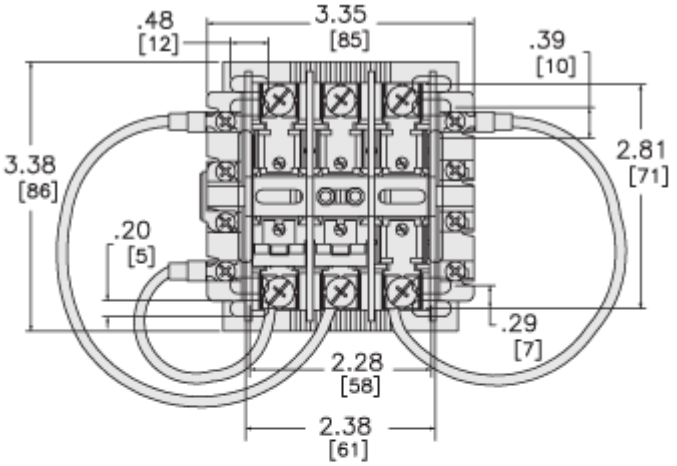

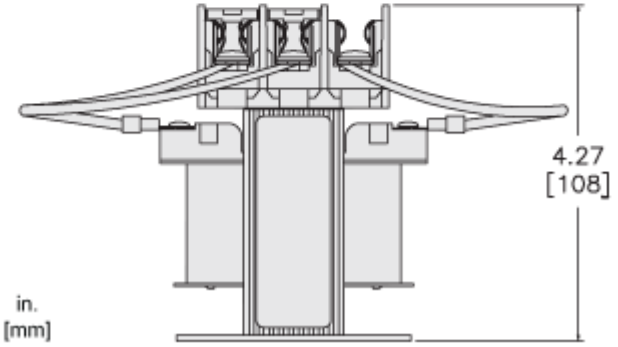

Connections and Schema

Connections and Wiring Diagrams

Voltage and Connection Options
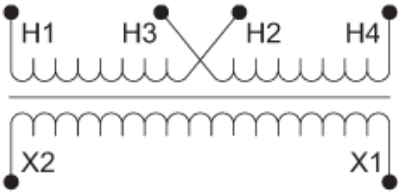
Voltage Code	Voltages		Connections	
	Primary	Secondary	Primary	Secondary
D1	220 x 440 230 x 460 240 x 480	110 115 120	220/230/240 V: Connect to H1 and H4 Jumper H1 and H3 Jumper H2 with H4 440/460/480 V: Connect to H1 and H4 Jumper H2 with H3	Connect to X1 and X2