Product data sheet

Specifications

Timing Relay, Type JCK, plug In, multifunction, programmable, 0.5 second to 999 hours, 10A, 240 VAC, 240 VAC 50/60 Hz

9050JCK70V24

Product availability: Stock - Normally stocked in distribution facility

Price*: 173.00 USD

Main

Product Range	9050JCK
Product Type	Timer
Timing Mode	Off-delay Trigger on-delay One shot falling edge One shot On-delay and off-delay Watchdog On-delay Repeat cycle Interval
Timing Range	0.1...99.9 min 0.05...9.99 s 1...999 s 0.1...99.9 h 0.1...99.9 s 1...999 h
Supply Voltage	240 V AC

Complementary

Power Consumption	3.2 VA
Current Rating	10 A
Switch Function	DPDT
Contact Composition	2 NO + 2 NC
Contact Material	Silver nickel
Maximum Switching Voltage	240 V AC
Mounting Type	Socket
Number Of Pins	11
Shape Of Pins	Tubular
For Use With	8501NR61 8501NR62

Environment

Certifications	UL Listed UL Recognized CE
Ambient Temperature Range - Operational	-18…122 °F (-28…50 °C)

Price is “List Price” and may be subject to a trade discount – check with your local distributor or retailer for actual price.

Disclaimer: This documentation is not intended as a substitute for and is not to be used for determining suitability or reliability of these products for specific user applications

Height	2.36 in (60 mm)
Width	1.73 in (44 mm)
Depth	3.58 in (91 mm)

Ordering and shipping details

Category	US10CP221652
Discount Schedule	0CP2
Gtin	785901132707
Returnability	Yes
Country Of Origin	US

Packing Units

Unit Type Of Package 1	PCE
Number Of Units In Package 1	1
Package 1 Height	2.60 in (6.604 cm)
Package 1 Width	1.90 in (4.826 cm)
Package 1 Length	4.30 in (10.922 cm)
Package 1 Weight	5.28 oz (149.685 g)
Unit Type Of Package 2	CAR
Number Of Units In Package 2	10
Package 2 Height	4.50 in (11.43 cm)
Package 2 Width	10.00 in (25.4 cm)
Package 2 Length	11.00 in (27.94 cm)
Package 2 Weight	3.00 lb(US) (1.361 kg)

Contractual warranty

Warranty	18 months

Sustainability

Green Premium™ label is Schneider Electric's commitment to delivering products with best-in-class environmental performance. Green Premium promises compliance with the latest regulations, transparency on environmental impacts, as well as circular and low-CO_2 products.

Guide to assessing product sustainability is a white paper that clarifies global eco-label standards and how to interpret environmental declarations.

Learn more about Green Premium >

Guide to assess a product's sustainability >

Transparency RoHS/REACh

Well-being performance

Reach Free Of Svhc	
Toxic Heavy Metal Free	
Mercury Free	
Rohs Exemption Information	Yes

Certifications & Standards

Reach Regulation	REACh Declaration
Eu Rohs Directive	Pro-active compliance (Product out of EU RoHS legal scope) EU RoHS Declaration
China Rohs Regulation	China RoHS declaration
Environmental Disclosure	Product Environmental Profile
Circularity Profile	End of Life Information

Dimensions Drawings

Approximate Dimensions

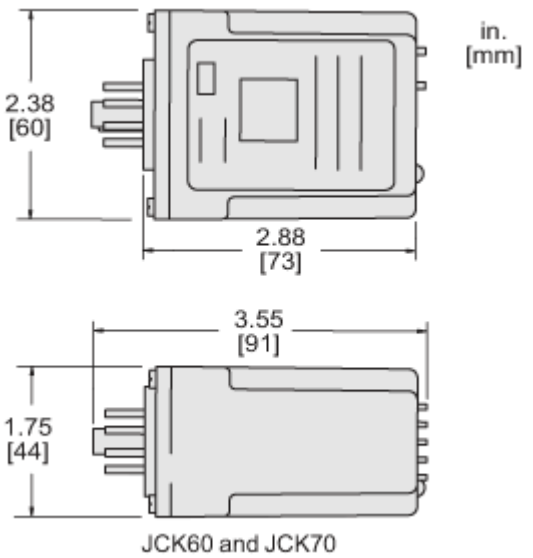

JCK60 and JCK70

Connections and Schema

Connections and Wiring Diagrams

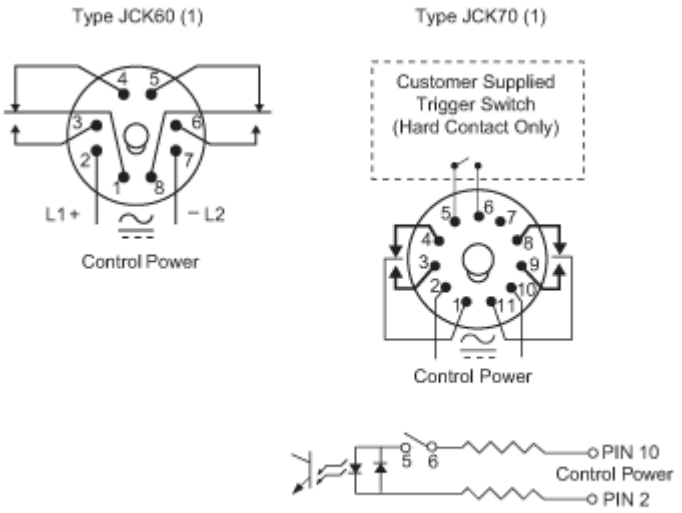

(1) Do not apply DC voltage to the 240 Vac timers (voltage code V24).