Product data sheet

Specifications

Pilot light, Harmony 9001SK, plastic, polycarbonate, domed, amber, 30mm, 110-120V

9001SKP1A9

Product availability: Non-Stock - Not normally stocked in distribution facility

Price*: 153.00 USD

Main

Range Of Product	Harmony 9001SK
Product Or Component Type	Pilot light
Device Short Name	9001SK
Lens Type	Domed plastic
Light Block Supply	Via integral transformer 120 V AC 50/60 Hz 6 V)

Complementary

Bezel Material	Plastic
Mounting Diameter	1.18 in (30 mm)
Shape Of Signaling Unit Head	Round
Cap/Operator Or Lens Colour	Amber
Light Source	incandescent
Bulb Base	BA 9s
[Us] Rated Supply Voltage	110...120 V AC 50/60 Hz
Tightening Torque	7.08 lbf.in (0.8 N.m) EN/IEC 60947-1
Shape Of Screw Head	Cross slotted
Connections - Terminals	Screw clamp terminals, 1 x 0.22...2 x 1.5 mm² EN/IEC 60947-1
[Ith] Conventional Free Air Thermal Current	10 A
Short-Circuit Protection	10 A cartridge fuse EN/IEC 60947-5-1
[Ui] Rated Insulation Voltage	250 V 2)EN/IEC 60947-1
[Uimp] Rated Impulse Withstand Voltage	2.5 kV EN/IEC 60947-1
Operating Position	Any position
Cad Overall Width	2.13 in (54 mm)
Cad Overall Height	2.76 in (70 mm)
Cad Overall Depth	1.65 in (42 mm)
Net Weight	0.40 lb(US) (0.181 kg)
Device Presentation	Complete product
Lens Type	Domed
[Us] Rated Supply Voltage	110...120 V

Price is “List Price” and may be subject to a trade discount – check with your local distributor or retailer for actual price.

Disclaimer: This documentation is not intended as a substitute for and is not to be used for determining suitability or reliability of these products for specific user applications

Light Block Supply	Via integral transformer
Supply Frequency	50...60 Hz
Lens Material	Polycarbonate
Size	30 mm
Light Source	Incandescent bulb

Environment

Electrical Shock Protection Class	Class II IEC 61140
Protective Treatment	TC
Ip Degree Of Protection	IP66 IEC 60529
Nema Degree Of Protection	NEMA 1 NEMA 12 NEMA 13 NEMA 2 NEMA 3 NEMA 3R NEMA 4 NEMA 4X
Vibration Resistance	7 gn 2…500 Hz)IEC 60068-2-6
Shock Resistance	50 gn IEC 60068-2-27
Ambient Air Temperature For Operation	-13…158 °F (-25…70 °C)
Ambient Air Temperature For Storage	-40…158 °F (-40…70 °C)
Standards	EN/IEC 60947-5-1 CSA C22.2 No 14 EN/IEC 60947-5-4 EN/IEC 60947-1 JIS C8201-5-1 JIS C 852 UL 508 JIS C8201-1
Product Certifications	NEMA UL 508

Ordering and shipping details

Category	US10CS121429
Discount Schedule	0CS1
Gtin	785901041122
Returnability	Yes
Country Of Origin	MX

Packing Units

Unit Type Of Package 1	PCE
Number Of Units In Package 1	1
Package 1 Height	1.89 in (4.8 cm)
Package 1 Width	2.20 in (5.6 cm)
Package 1 Length	3.70 in (9.4 cm)
Package 1 Weight	5.92 oz (167.829 g)

Contractual warranty

Warranty	18 months

Sustainability

Green Premium™ label is Schneider Electric's commitment to delivering products with best-in-class environmental performance. Green Premium promises compliance with the latest regulations, transparency on environmental impacts, as well as circular and low-CO_2 products.

Guide to assessing product sustainability is a white paper that clarifies global eco-label standards and how to interpret environmental declarations.

Learn more about Green Premium >

Guide to assess a product's sustainability >

Transparency RoHS/REACh

Well-being performance

- Reach Free Of Svhc
- Toxic Heavy Metal Free
- Mercury Free
- Rohs Exemption Information — Yes

Certifications & Standards

Reach Regulation	REACh Declaration
Eu Rohs Directive	Pro-active compliance (Product out of EU RoHS legal scope) EU RoHS Declaration
China Rohs Regulation	China RoHS declaration
Environmental Disclosure	Product Environmental Profile
Weee	The product must be disposed on European Union markets following specific waste collection and never end up in rubbish bins.
Circularity Profile	End of Life Information
California Proposition 65	WARNING: This product can expose you to chemicals including: Lead and lead compounds, which is known to the State of California to cause cancer and birth defects or other reproductive harm. For more information go to www.P65Warnings.ca.gov

Dimensions Drawings

Dimensions

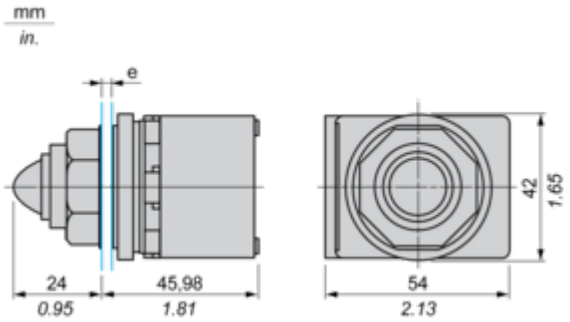

e panel thickness: 1 to 6 mm / 0.04 to 0.24 in.