Product data sheet

Specifications

Head for selector switch, Harmony 9001K, metal, long handle, black, 30mm, 3 positions, return both sides to center

9001KS53FB

Product availability: Stock - Normally stocked in distribution facility

Price*: 81.00 USD

Main

Range Of Product	Harmony 9001K
Product Or Component Type	Head for selector switch
Device Short Name	9001K
Type Of Operator	To centre spring return
Operator Profile	Black long handle

Complementary

Bezel Material	Metal
Mounting Diameter	1.18 in (30 mm)
Net Weight	0.38 lb(US) (0.172 kg)
Shape Of Signaling Unit Head	Octagonal
Operator Position Information	3 positions
Contacts Type And Composition	Without contact block
Mechanical Durability	500000 cycles
Product Compatibility	9001KA1 side 1 or 2
Device Presentation	Basic element
Cap/Operator Or Lens Colour	Black
Operator Profile	Long handle
Type Of Operator	Spring return
Size	30 mm
Return	Both sides to centre
Cam Profile	3

Environment

Protective Treatment	TC
Ambient Air Temperature For Storage	-40…158 °F (-40…70 °C)
Ambient Air Temperature For Operation	-13…158 °F (-25…70 °C)
Overvoltage Category	Class II IEC 61140
Ip Degree Of Protection	IP66 IEC 60529

Price is “List Price” and may be subject to a trade discount – check with your local distributor or retailer for actual price.

Disclaimer: This documentation is not intended as a substitute for and is not to be used for determining suitability or reliability of these products for specific user applications

Nema Degree Of Protection	NEMA 1 NEMA 12 NEMA 13 NEMA 2 NEMA 3 NEMA 3R NEMA 4
Standards	JIS C 4520 IEC 60947-1 IEC 60947-5-1 CSA C22.2 No 14 UL 508 JIS C 852 IEC 60947-5-4
Product Certifications	NEMA UL 508
Vibration Resistance	7 gn 2…500 Hz)IEC 60068-2-6
Shock Resistance	50 gn IEC 60068-2-27

Ordering and shipping details

Category	US10CS121426
Discount Schedule	0CS1
Gtin	785901048497
Returnability	Yes
Country Of Origin	MX

Packing Units

Unit Type Of Package 1	PCE
Number Of Units In Package 1	1
Package 1 Height	1.89 in (4.800 cm)
Package 1 Width	2.20 in (5.600 cm)
Package 1 Length	3.74 in (9.500 cm)
Package 1 Weight	4.44 oz (126.000 g)
Unit Type Of Package 2	S01
Number Of Units In Package 2	24
Package 2 Height	5.91 in (15.000 cm)
Package 2 Width	5.91 in (15.000 cm)
Package 2 Length	15.75 in (40.000 cm)
Package 2 Weight	7.05 lb(US) (3.199 kg)

Contractual warranty

Warranty	18 months

Sustainability

Green Premium™ label is Schneider Electric's commitment to delivering products with best-in-class environmental performance. Green Premium promises compliance with the latest regulations, transparency on environmental impacts, as well as circular and low-CO_2 products.

Guide to assessing product sustainability is a white paper that clarifies global eco-label standards and how to interpret environmental declarations.

Learn more about Green Premium >

Guide to assess a product's sustainability >

Transparency RoHS/REACh

Well-being performance

Mercury Free

Rohs Exemption Information	Yes

Certifications & Standards

Reach Regulation	REACh Declaration
Eu Rohs Directive	Pro-active compliance (Product out of EU RoHS legal scope)
China Rohs Regulation	China RoHS declaration
Environmental Disclosure	Product Environmental Profile
Weee	The product must be disposed on European Union markets following specific waste collection and never end up in rubbish bins.
Circularity Profile	No need of specific recycling operations
California Proposition 65	WARNING: This product can expose you to chemicals including: Nickel compounds, which is known to the State of California to cause cancer, and Di-isodecyl phthalate (DIDP), which is known to the State of California to cause birth defects or other reproductive harm. For more information go to www.P65Warnings.ca.gov

Dimensions Drawings

Dimensions

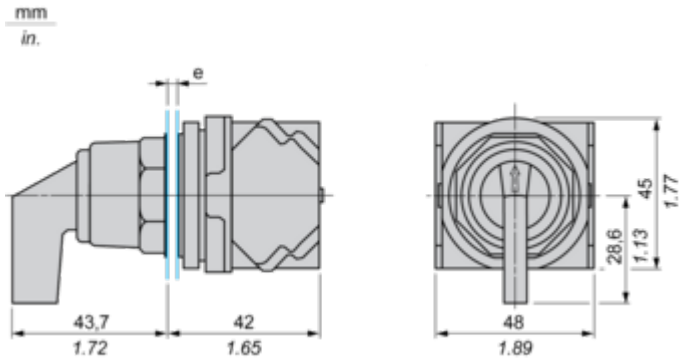

e panel thickness: 1 to 6 mm / 0.04 to 0.24 in.

Mounting and Clearance

Contact Block Mounting Position

Top and Rear views

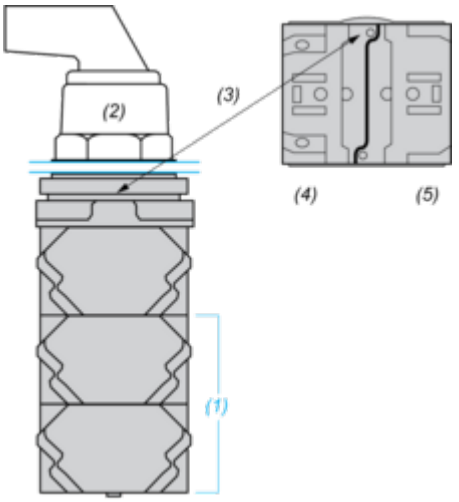

(1) It is possible to mount up to 3 levels of contacts blocks (maximum of 6 contacts blocks)
(2) Operator
(3) Locating notch
(4) Side 1
(5) Side 2

Panel Cut-Out

Clearance

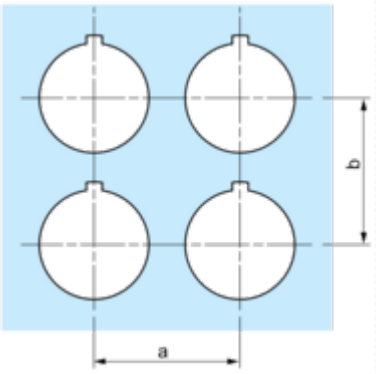

Legend plate	a min.		b min.	
	mm	in.	mm	in.
9001KN2••	57.2	2.25	44.5	1.75
9001KN3••	57.2	2.25	50.8	2.00

Individual Cut-outs Details
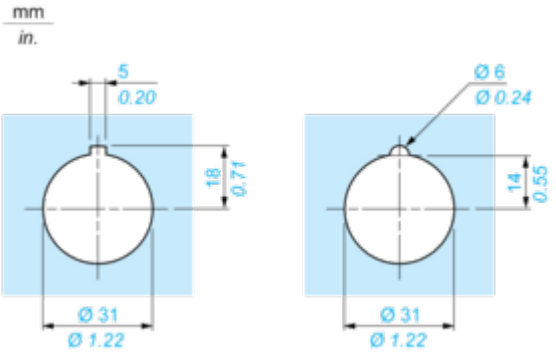
2 alternatives