# Product data sheet

Specifications

## 30mm Push Button, Type K, push button, no guard, universal

9001KR3U

**Product availability: Stock - Normally stocked in distribution facility**

**Price*: 38.60 USD**

## Main

| | |
|---|---|
| **Range Of Product** | Harmony 9001K |
| **Product Or Component Type** | Head for push-button |
| **Device Short Name** | 9001K |
| **Operator Profile** | projecting, unmarked |
| **Operator Additional Information** | Without guard |

## Complementary

| | |
|---|---|
| **Mounting Diameter** | 1.18 in (30 mm) |
| **Shape Of Signaling Unit Head** | Round |
| **Type Of Operator** | spring return |
| **Net Weight** | 0.20 lb(US) (0.09 kg) |
| **Bezel Material** | Metal |
| **Cap/Operator Or Lens Colour** | 7 colours choice |
| **Operator Profile** | Projecting |
| **Type Of Operator** | Spring return |
| **Contacts Type And Composition** | Without contact block |

## Ordering and shipping details

| | |
|---|---|
| **Category** | US10CS121426 |
| **Discount Schedule** | 0CS1 |
| **Gtin** | 785901874911 |
| **Returnability** | Yes |
| **Country Of Origin** | MX |

## Packing Units

| | |
|---|---|
| **Unit Type Of Package 1** | PCE |
| **Number Of Units In Package 1** | 1 |
| **Package 1 Height** | 2.00 in (5.08 cm) |
| **Package 1 Width** | 2.30 in (5.842 cm) |
| **Package 1 Length** | 2.80 in (7.112 cm) |
| **Package 1 Weight** | 3.68 oz (104.326 g) |

Price is “List Price” and may be subject to a trade discount – check with your local distributor or retailer for actual price.

Disclaimer: This documentation is not intended as a substitute for and is not to be used for determining suitability or reliability of these products for specific user applications

| | |
|---|---|
| **Unit Type Of Package 2** | PAL |
| **Number Of Units In Package 2** | 3200 |
| **Package 2 Height** | 40.00 in (101.6 cm) |
| **Package 2 Width** | 40.00 in (101.6 cm) |
| **Package 2 Length** | 48.00 in (121.92 cm) |
| **Package 2 Weight** | 766.00 lb(US) (347.451 kg) |

## Contractual warranty

| | |
|---|---|
| **Warranty** | 18 months |

## Sustainability

**Green Premium™ label** is Schneider Electric's commitment to delivering products with best-in-class environmental performance. Green Premium promises compliance with the latest regulations, transparency on environmental impacts, as well as circular and low-$CO_2$ products.

**Guide to assessing product sustainability** is a white paper that clarifies global eco-label standards and how to interpret environmental declarations.

Learn more about Green Premium >

Guide to assess a product's sustainability >

Transparency RoHS/REACh

## Well-being performance

Mercury Free

| | |
|---|---|
| Rohs Exemption Information | Yes |

## Certifications & Standards

| | |
|---|---|
| **Reach Regulation** | REACh Declaration |
| **Eu Rohs Directive** | Pro-active compliance (Product out of EU RoHS legal scope) |
| **China Rohs Regulation** | China RoHS declaration |
| **Environmental Disclosure** | Product Environmental Profile |
| **Weee** | The product must be disposed on European Union markets following specific waste collection and never end up in rubbish bins. |
| **Circularity Profile** | No need of specific recycling operations |
| **California Proposition 65** | WARNING: This product can expose you to chemicals including: Lead and lead compounds, which is known to the State of California to cause cancer and birth defects or other reproductive harm. For more information go to www.P65Warnings.ca.gov |

Dimensions Drawings

## Dimensions

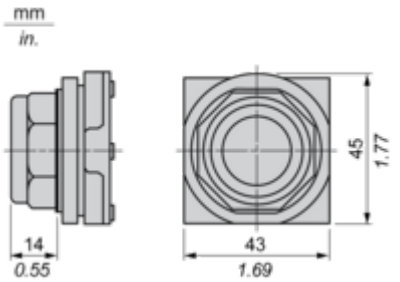

## Mounting and Clearance

### Contact Block Mounting Position

Top and Rear views

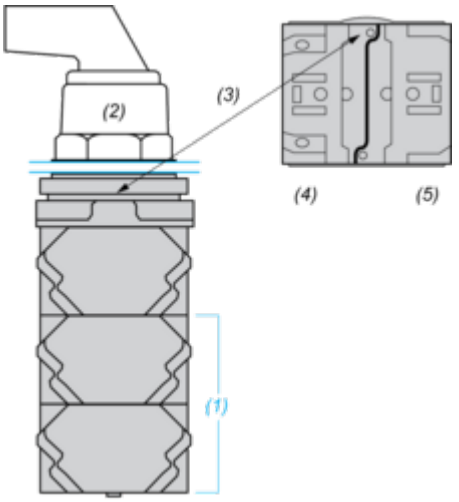


**(1)** It is possible to mount up to 3 levels of contacts blocks (maximum of 6 contacts blocks)
**(2)** Operator
**(3)** Locating notch
**(4)** Side 1
**(5)** Side 2

## Panel Cut-Out

### Clearance

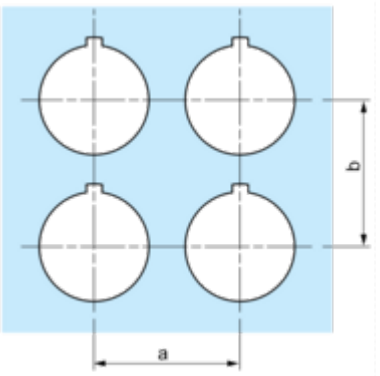


| Legend plate | a min. | | b min. | |
|---|---|---|---|---|
| | mm | in. | mm | in. |
| 9001KN2•• | 57.2 | 2.25 | 44.5 | 1.75 |
| 9001KN3•• | 57.2 | 2.25 | 50.8 | 2.00 |

### Individual Cut-outs Details
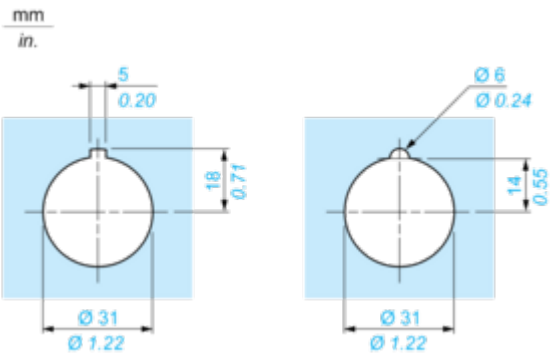
2 alternatives