Product data sheet

Specifications

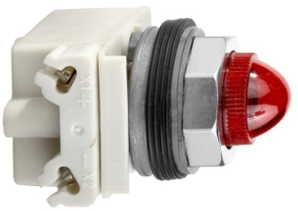

Pilot light, Harmony 9001K, metal, polycarbonate, domed, red, 30mm, 24-28V

9001KP35R9

Product availability: Non-Stock - Not normally stocked in distribution facility

Price*: 125.00 USD

Main

Range Of Product	Harmony 9001K
Product Or Component Type	Pilot light
Device Short Name	9001K

Complementary

Bezel Material	Metal
Mounting Diameter	1.18 in (30 mm)
Shape Of Signaling Unit Head	Round
Lens Type	Domed plastic
Cap/Operator Or Lens Colour	Red
Light Source	incandescent
Bulb Base	BA 9s
Light Block Supply	Direct 24...28 V AC/DC
Connections - Terminals	Screw clamp terminals, 1 x 0.22...2 x 1.5 mm² IEC 60947-1
Tightening Torque	7.08 lbf.in (0.8 N.m) IEC 60947-1
Shape Of Screw Head	Cross slotted
Shape Of Screw Head	Cross slotted
Operating Position	Any position
[Ui] Rated Insulation Voltage	250 V 2)IEC 60947-1
[Uimp] Rated Impulse Withstand Voltage	2.5 kV IEC 60947-1
Short-Circuit Protection	10 A cartridge fuse IEC 60947-5-1
Light Source	Incandescent bulb
[Ith] Conventional Free Air Thermal Current	10 A
Cad Overall Width	2.13 in (54 mm)
Cad Overall Height	2.76 in (70 mm)
Cad Overall Depth	1.65 in (42 mm)
[Us] Rated Supply Voltage	24...28 V AC/DC
Net Weight	0.30 lb(US) (0.134 kg)
Device Presentation	Complete product

Price is “List Price” and may be subject to a trade discount – check with your local distributor or retailer for actual price.

Disclaimer: This documentation is not intended as a substitute for and is not to be used for determining suitability or reliability of these products for specific user applications

Lens Type	Domed
[Us] Rated Supply Voltage	24...28 V
Light Block Supply	Full voltage
Lens Material	Polycarbonate
Size	30 mm

Environment

Standards	JIS C8201-5-1 CSA C22.2 No 14 JIS C 852 EN/IEC 60947-1 EN/IEC 60947-5-1 EN/IEC 60947-5-4 UL 508 JIS C8201-1
Product Certifications	UL 508 NEMA
Protective Treatment	TC
Ambient Air Temperature For Storage	-40…158 °F (-40…70 °C)
Ambient Air Temperature For Operation	-13…158 °F (-25…70 °C)
Vibration Resistance	7 gn 2…500 Hz)IEC 60068-2-6
Shock Resistance	50 gn IEC 60068-2-27
Overvoltage Category	Class II IEC 61140
Ip Degree Of Protection	IP66 IEC 60529
Nema Degree Of Protection	NEMA 1 NEMA 12 NEMA 13 NEMA 2 NEMA 3 NEMA 3R NEMA 4 NEMA 6

Ordering and shipping details

Category	US10CS121426
Discount Schedule	0CS1
Gtin	785901794387
Returnability	No
Country Of Origin	MX

Packing Units

Unit Type Of Package 1	PCE
Number Of Units In Package 1	1
Package 1 Height	2.16 in (5.499 cm)
Package 1 Width	3.66 in (9.299 cm)
Package 1 Length	2.24 in (5.7 cm)
Package 1 Weight	5.12 oz (145.15 g)
Unit Type Of Package 2	S01
Number Of Units In Package 2	24

Package 2 Height	5.91 in (15 cm)
Package 2 Width	5.91 in (15 cm)
Package 2 Length	15.75 in (40 cm)
Package 2 Weight	8.01 lb(US) (3.633 kg)

Contractual warranty

Warranty	18 months

Sustainability

Green Premium™ label is Schneider Electric's commitment to delivering products with best-in-class environmental performance. Green Premium promises compliance with the latest regulations, transparency on environmental impacts, as well as circular and low-CO_2 products.

Guide to assessing product sustainability is a white paper that clarifies global eco-label standards and how to interpret environmental declarations.

Learn more about Green Premium >

Guide to assess a product's sustainability >

Transparency RoHS/REACh

Well-being performance

Mercury Free

Rohs Exemption Information	Yes

Certifications & Standards

Reach Regulation	REACh Declaration
Eu Rohs Directive	Pro-active compliance (Product out of EU RoHS legal scope)
China Rohs Regulation	China RoHS declaration
Environmental Disclosure	Product Environmental Profile
Weee	The product must be disposed on European Union markets following specific waste collection and never end up in rubbish bins.
Circularity Profile	No need of specific recycling operations
California Proposition 65	WARNING: This product can expose you to chemicals including: Lead and lead compounds, which is known to the State of California to cause cancer and birth defects or other reproductive harm. For more information go to www.P65Warnings.ca.gov

Dimensions Drawings

Dimensions

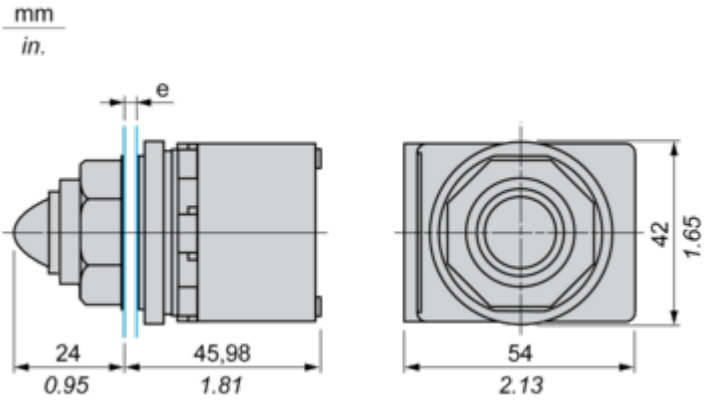

e panel thickness: 1 to 6 mm / 0.04 to 0.24 in.