# Product data sheet

Specifications

Green Premium™

## Pilot light, Harmony 9001K, metal, polycarbonate, domed, blue, 30mm, LED blue, 24...28V

9001KP35LLL9

**Product availability: Non-Stock - Not normally stocked in distribution facility**

**Price*: 153.00 USD**

## Main

| | |
|---|---|
| **Range Of Product** | Harmony 9001K |
| **Product Or Component Type** | Pilot light |
| **Device Short Name** | 9001K |

## Complementary

| | |
|---|---|
| **Bezel Material** | Metal |
| **Mounting Diameter** | 1.18 in (30 mm) |
| **Shape Of Signaling Unit Head** | Round |
| **Lens Type** | Domed plastic |
| **Cap/Operator Or Lens Colour** | Blue |
| **Light Source** | Blue LED |
| **Bulb Base** | BA 9s |
| **Light Block Supply** | Direct 24...28 V AC/DC |
| **Connections - Terminals** | Screw clamp terminals, 1 x 0.22...2 x 1.5 mm² IEC 60947-1 |
| **Tightening Torque** | 7.08 lbf.in (0.8 N.m) IEC 60947-1 |
| **Shape Of Screw Head** | Cross slotted |
| **Shape Of Screw Head** | Cross slotted |
| **Operating Position** | Any position |
| **[Ui] Rated Insulation Voltage** | 250 V 2)IEC 60947-1 |
| **[Uimp] Rated Impulse Withstand Voltage** | 2.5 kV IEC 60947-1 |
| **Short-Circuit Protection** | 10 A cartridge fuse IEC 60947-5-1 |
| **Light Source** | LED |
| **[Ith] Conventional Free Air Thermal Current** | 10 A |
| **Cad Overall Width** | 2.13 in (54 mm) |
| **Cad Overall Height** | 2.76 in (70 mm) |
| **Cad Overall Depth** | 1.65 in (42 mm) |
| **[Us] Rated Supply Voltage** | 24...28 V AC/DC |
| **Net Weight** | 0.30 lb(US) (0.134 kg) |
| **Device Presentation** | Complete product |

Price is “List Price” and may be subject to a trade discount – check with your local distributor or retailer for actual price.

Disclaimer: This documentation is not intended as a substitute for and is not to be used for determining suitability or reliability of these products for specific user applications

| | |
|---|---|
| **Lens Type** | Domed |
| **[Us] Rated Supply Voltage** | 24...28 V |
| **Light Source Colour** | Blue |
| **Lens Material** | Polycarbonate |
| **Size** | 30 mm |

## Environment

| | |
|---|---|
| **Standards** | EN/IEC 60947-1<br>EN/IEC 60947-5-4<br>CSA C22.2 No 14<br>JIS C8201-5-1<br>EN/IEC 60947-5-1<br>UL 508<br>JIS C 852<br>JIS C8201-1 |
| **Product Certifications** | UL 508<br>NEMA |
| **Protective Treatment** | TC |
| **Ambient Air Temperature For Storage** | -40…158 °F (-40…70 °C) |
| **Ambient Air Temperature For Operation** | -13…158 °F (-25…70 °C) |
| **Vibration Resistance** | 7 gn 2…500 Hz)IEC 60068-2-6 |
| **Shock Resistance** | 50 gn IEC 60068-2-27 |
| **Overvoltage Category** | Class II IEC 61140 |
| **Ip Degree Of Protection** | IP66 IEC 60529 |
| **Nema Degree Of Protection** | NEMA 1<br>NEMA 12<br>NEMA 13<br>NEMA 2<br>NEMA 3<br>NEMA 3R<br>NEMA 4<br>NEMA 6 |

## Ordering and shipping details

| | |
|---|---|
| **Category** | US10CS121426 |
| **Discount Schedule** | 0CS1 |
| **Gtin** | 785901601968 |
| **Returnability** | No |
| **Country Of Origin** | MX |

## Packing Units

| | |
|---|---|
| **Unit Type Of Package 1** | PCE |
| **Number Of Units In Package 1** | 1 |
| **Package 1 Height** | 1.80 in (4.572 cm) |
| **Package 1 Width** | 2.10 in (5.334 cm) |
| **Package 1 Length** | 3.60 in (9.144 cm) |
| **Package 1 Weight** | 8.00 oz (226.796 g) |

## Contractual warranty

| | |
|---|---|
| **Warranty** | 18 months |

## Sustainability

**Green Premium™ label** is Schneider Electric's commitment to delivering products with best-in-class environmental performance. Green Premium promises compliance with the latest regulations, transparency on environmental impacts, as well as circular and low-$CO_2$ products.

**Guide to assessing product sustainability** is a white paper that clarifies global eco-label standards and how to interpret environmental declarations.

Learn more about Green Premium >

Guide to assess a product's sustainability >

Transparency RoHS/REACh

## Well-being performance

Mercury Free

| | |
|---|---|
| Rohs Exemption Information | Yes |

## Certifications & Standards

| | |
|---|---|
| **Reach Regulation** | REACh Declaration |
| **Eu Rohs Directive** | Pro-active compliance (Product out of EU RoHS legal scope) |
| **China Rohs Regulation** | China RoHS declaration |
| **Environmental Disclosure** | Product Environmental Profile |
| **Weee** | The product must be disposed on European Union markets following specific waste collection and never end up in rubbish bins. |
| **Circularity Profile** | No need of specific recycling operations |
| **California Proposition 65** | WARNING: This product can expose you to chemicals including: Lead and lead compounds, which is known to the State of California to cause cancer and birth defects or other reproductive harm. For more information go to www.P65Warnings.ca.gov |

## Dimensions Drawings

### Dimensions

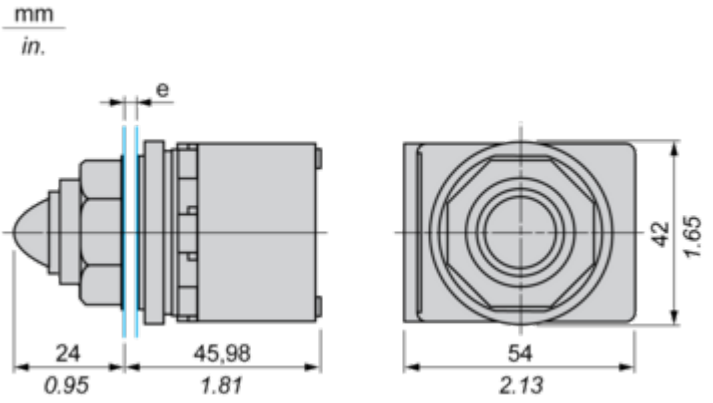


**e** panel thickness: 1 to 6 mm / 0.04 to 0.24 in.