Product data sheet

Specifications

Blank legend, Harmony 9001K, Harmony 9001SK, 30mm, plastic, black with white letters, 57mm square

9001KN100BP

Product availability: Stock - Normally stocked in distribution facility

Price*: 5.28 USD

Main

Range Of Product	Harmony 9001K Harmony 9001SK
Product Or Component Type	Blank legend
Accessory / Separate Part Type	Legend plate
Accessory / Separate Part Category	Marking accessory
Accessory / Separate Part Destination	Control and signalling units Ø 30 mm
Marking	White unmarked black
Label Dimensions	57 x 57 mm

Complementary

Mounting Diameter	1.18 in (30 mm)
Material	Plastic
Net Weight	0.01 lb(US) (0.005 kg)
Size	30 mm
Colour Of Marking	White
Background Colour	Black

Ordering and shipping details

Category	US10CS121433
Discount Schedule	0CS1
Gtin	785901064855
Returnability	Yes
Country Of Origin	MX

Packing Units

Unit Type Of Package 1	PCE
Number Of Units In Package 1	1
Package 1 Height	0.10 in (0.254 cm)
Package 1 Width	2.30 in (5.842 cm)
Package 1 Length	2.30 in (5.842 cm)

Price is “List Price” and may be subject to a trade discount – check with your local distributor or retailer for actual price.

Disclaimer: This documentation is not intended as a substitute for and is not to be used for determining suitability or reliability of these products for specific user applications

Package 1 Weight	0.16 oz (4.536 g)

Contractual warranty

Warranty	18 months

Sustainability

Green Premium™ label is Schneider Electric's commitment to delivering products with best-in-class environmental performance. Green Premium promises compliance with the latest regulations, transparency on environmental impacts, as well as circular and low-CO_2 products.

Guide to assessing product sustainability is a white paper that clarifies global eco-label standards and how to interpret environmental declarations.

Learn more about Green Premium >

Guide to assess a product's sustainability >

Transparency RoHS/REACh

Well-being performance

Mercury Free

Rohs Exemption Information	Yes

Certifications & Standards

Reach Regulation	REACh Declaration
Eu Rohs Directive	Pro-active compliance (Product out of EU RoHS legal scope)
China Rohs Regulation	China RoHS declaration
Environmental Disclosure	Product Environmental Profile
Circularity Profile	No need of specific recycling operations
California Proposition 65	WARNING: This product can expose you to chemicals including: Nickel compounds, which is known to the State of California to cause cancer, and Di-isodecyl phthalate (DIDP), which is known to the State of California to cause birth defects or other reproductive harm. For more information go to www.P65Warnings.ca.gov

Dimensions Drawings
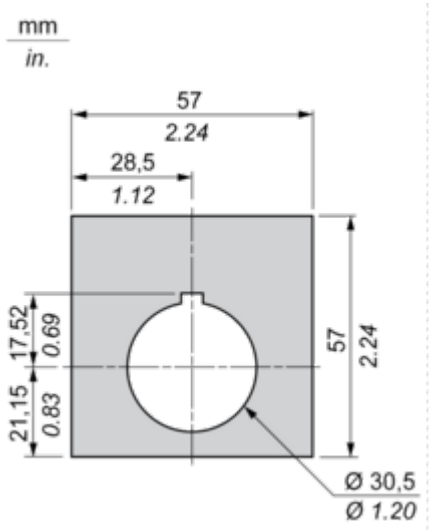
Dimensions