Product data sheet

Specifications

Light block, Harmony 9001K, Harmony 9001SK, 30mm, incandescent bulb, 24...28V

9001KM35

Product availability: Stock - Normally stocked in distribution facility

Price*: 86.00 USD

Main

Range Of Product	Harmony 9001K Harmony 9001SK
Product Or Component Type	Light block
Device Short Name	9001K
Bulb Base	BA 9s
Light Block Supply	Direct via integral resistance

Complementary

Net Weight	0.11 lb(US) (0.05 kg)
Light Source	Incandescent bulb
[Us] Rated Supply Voltage	24 V AC/DC
[Us] Rated Supply Voltage	24...28 V
Light Block Supply	Full voltage
Size	30 mm

Environment

Protective Treatment	TC
Ambient Air Temperature For Storage	-40…158 °F (-40…70 °C)
Ambient Air Temperature For Operation	-13…158 °F (-25…70 °C)
Ip Degree Of Protection	IP20 IEC 60529
Standards	IEC 60947-5-4 JIS C 852 UL 508 IEC 60947-1 CSA C22.2 No 14 JIS C 4520 IEC 60947-5-1
Product Certifications	NEMA UL 508
Electrical Shock Protection Class	Class II IEC 61140
Vibration Resistance	7 gn 2…500 Hz)IEC 60068-2-6
Shock Resistance	50 gn IEC 60068-2-27

Ordering and shipping details

Price is “List Price” and may be subject to a trade discount – check with your local distributor or retailer for actual price.

Disclaimer: This documentation is not intended as a substitute for and is not to be used for determining suitability or reliability of these products for specific user applications

Category	US10CS121435
Discount Schedule	0CS1
Gtin	785901726524
Returnability	Yes
Country Of Origin	MX

Packing Units

Unit Type Of Package 1	PCE
Number Of Units In Package 1	1
Package 1 Height	2.20 in (5.588 cm)
Package 1 Width	3.60 in (9.144 cm)
Package 1 Length	1.90 in (4.826 cm)
Package 1 Weight	2.24 oz (63.503 g)

Contractual warranty

Warranty	18 months

Sustainability

Green Premium™ label is Schneider Electric's commitment to delivering products with best-in-class environmental performance. Green Premium promises compliance with the latest regulations, transparency on environmental impacts, as well as circular and low-CO_2 products.

Guide to assessing product sustainability is a white paper that clarifies global eco-label standards and how to interpret environmental declarations.

Learn more about Green Premium >

Guide to assess a product's sustainability >

Transparency RoHS/REACh

Well-being performance

Mercury Free

Rohs Exemption Information	Yes

Certifications & Standards

Reach Regulation	REACh Declaration
Eu Rohs Directive	Pro-active compliance (Product out of EU RoHS legal scope)
China Rohs Regulation	China RoHS declaration
Environmental Disclosure	Product Environmental Profile
Weee	The product must be disposed on European Union markets following specific waste collection and never end up in rubbish bins.
Circularity Profile	No need of specific recycling operations
California Proposition 65	WARNING: This product can expose you to chemicals including: Lead and lead compounds, which is known to the State of California to cause cancer and birth defects or other reproductive harm. For more information go to www.P65Warnings.ca.gov

Dimensions Drawings

Dimensions

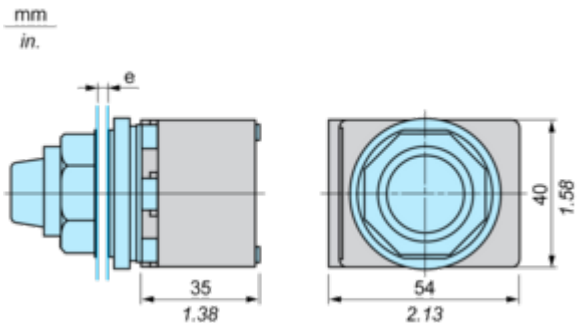

e panel thickness: 1 to 6 mm / 0.04 to 0.24 in.