Product data sheet

Specifications

30mm Push Button, Types K, SK or KX, contact block, 1 NC late opening

9001KA5

Product availability: Stock - Normally stocked in distribution facility

Price*: 21.50 USD

Main

Range Of Product	Harmony 9001K Harmony 9001SK
Product Or Component Type	Contact block
Device Short Name	9001K
Contacts Type And Composition	1 NC

Complementary

Terminals Description Iso N°1	(3-4)NO_CL
Net Weight	0.05 lb(US) (0.023 kg)
Contact Operation	Late-break
Positive Opening	With IEC 60947-5-2
Connections - Terminals	Screw clamp terminals, 1 x 0.22...2 x 2.5 mm² IEC 60947-1
Tightening Torque	7.08 lbf.in (0.8 N.m) IEC 60947-1
Shape Of Screw Head	Cross slotted
Contacts Material	Silver alloy contacts
Short-Circuit Protection	10 A cartridge fuse IEC 60947-5-1
[Ith] Conventional Free Air Thermal Current	10 A
[Ui] Rated Insulation Voltage	250 V 3)IEC 60947-1
[Uimp] Rated Impulse Withstand Voltage	2.5 kV IEC 60947-1
[Ie] Rated Operational Current	3 A 240 V, AC-15, A600-Q600 NEMA 0.55 A 125 V, DC-13, A600-Q600 NEMA
[Icm] Rated Short-Circuit Making Capacity	12 kA 600 V AC-15, 7200 VA 15 kA 480 V AC-15, 7200 VA 30 kA 240 V AC-15, 7200 VA 60 kA 120 V AC-15, 7200 VA 0.55 kA 125 V DC-13 0.1 kA 600 V DC-13 0.27 kA 250 V DC-13
Rated Breaking Capacity	3 kA 240 V AC-15, 720 VA 6 kA 120 V AC-15, 720 VA 1.2 kA 600 V AC-15, 720 VA 1.5 kA 480 V AC-15, 720 VA 0.1 kA 600 V DC-13 0.27 kA 250 V DC-13 0.55 kA 125 V DC-13
[Us] Rated Supply Voltage	0...600 V

Price is “List Price” and may be subject to a trade discount – check with your local distributor or retailer for actual price.

Disclaimer: This documentation is not intended as a substitute for and is not to be used for determining suitability or reliability of these products for specific user applications

Connections - Terminals	Screw-clamp terminals

Environment

Protective Treatment	TC
Ambient Air Temperature For Storage	-40…158 °F (-40…70 °C)
Ambient Air Temperature For Operation	-13…158 °F (-25…70 °C)
Electrical Shock Protection Class	Class II IEC 61140
Ip Degree Of Protection	IP20 IEC 60529
Standards	IEC 60947-5-1 UL 508 IEC 60947-5-4 CSA C22.2 No 14 JIS C 4520 IEC 60947-1 JIS C 852 UL 60947-5-1
Product Certifications	NEMA UL 508
Vibration Resistance	7 gn 2…500 Hz)IEC 60068-2-6
Shock Resistance	50 gn IEC 60068-2-27

Ordering and shipping details

Category	US10CS121434
Discount Schedule	0CS1
Gtin	785901880103
Returnability	Yes
Country Of Origin	US

Packing Units

Unit Type Of Package 1	PCE
Number Of Units In Package 1	1
Package 1 Height	1.00 in (2.54 cm)
Package 1 Width	1.40 in (3.556 cm)
Package 1 Length	1.70 in (4.318 cm)
Package 1 Weight	0.80 oz (22.68 g)

Contractual warranty

Warranty	18 months

Sustainability

Green Premium™ label is Schneider Electric's commitment to delivering products with best-in-class environmental performance. Green Premium promises compliance with the latest regulations, transparency on environmental impacts, as well as circular and low-CO_2 products.

Guide to assessing product sustainability is a white paper that clarifies global eco-label standards and how to interpret environmental declarations.

Learn more about Green Premium >

Guide to assess a product's sustainability >

Transparency RoHS/REACh

Well-being performance

Mercury Free

Rohs Exemption Information	Yes

Certifications & Standards

Reach Regulation	REACh Declaration
Eu Rohs Directive	Pro-active compliance (Product out of EU RoHS legal scope)
China Rohs Regulation	China RoHS declaration
Environmental Disclosure	Product Environmental Profile
Weee	The product must be disposed on European Union markets following specific waste collection and never end up in rubbish bins.
Circularity Profile	No need of specific recycling operations
California Proposition 65	WARNING: This product can expose you to chemicals including: Nickel compounds, which is known to the State of California to cause cancer, and Di-isodecyl phthalate (DIDP), which is known to the State of California to cause birth defects or other reproductive harm. For more information go to www.P65Warnings.ca.gov

Dimensions Drawings

Dimensions

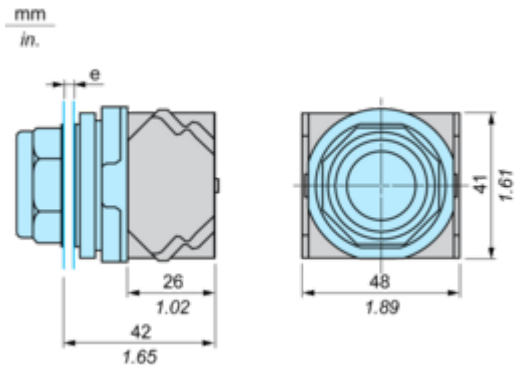

e panel thickness: 1 to 6 mm / 0.04 to 0.24 in.