Product data sheet

Specifications

Complete control station, Harmony 9001B, 2 push buttons UP-DOWN, 5A, 600V AC, 2NO, NEMA 1

9001BG208

Product availability: Stock - Normally stocked in distribution facility

Price*: 107.00 USD

Main

Range Of Product	Harmony 9001B
Product Or Component Type	Complete control station
Device Short Name	9001BG

Complementary

Control Station Composition	2 push-buttons UP-DOWN
Contacts Type And Composition	2 NO
Connections - Terminals	Screw clamp terminal
[Ie] Rated Operational Current	5 A 600 V
Device Mounting	Surface
Type Of Installation	Indoor

Environment

Nema Degree Of Protection	NEMA 1
Product Certifications	CE CSA LR25490 class 3211 03 UL listed file E42259 CCN NKCR
Environmental Characteristic	Standard environment

Ordering and shipping details

Category	US10CS121421
Discount Schedule	0CS1
Gtin	785901390220
Returnability	Yes
Country Of Origin	MX

Packing Units

Unit Type Of Package 1	PCE
Number Of Units In Package 1	1
Package 1 Height	2.09 in (5.3 cm)
Package 1 Width	2.52 in (6.4 cm)
Package 1 Length	4.02 in (10.2 cm)

Price is “List Price” and may be subject to a trade discount – check with your local distributor or retailer for actual price.

Disclaimer: This documentation is not intended as a substitute for and is not to be used for determining suitability or reliability of these products for specific user applications

Package 1 Weight	9.76 oz (276.7 g)

Contractual warranty

Warranty	18 months

Sustainability

Green Premium™ label is Schneider Electric's commitment to delivering products with best-in-class environmental performance. Green Premium promises compliance with the latest regulations, transparency on environmental impacts, as well as circular and low-CO_2 products.

Guide to assessing product sustainability is a white paper that clarifies global eco-label standards and how to interpret environmental declarations.

Learn more about Green Premium >

Guide to assess a product's sustainability >

RoHS/REACh

Well-being performance

- Reach Free Of Svhc
- Toxic Heavy Metal Free
- Mercury Free
- Rohs Exemption Information — Yes

Certifications & Standards

Reach Regulation	REACh Declaration
Eu Rohs Directive	Pro-active compliance (Product out of EU RoHS legal scope) EU RoHS Declaration
China Rohs Regulation	China RoHS declaration
Circularity Profile	End of Life Information
California Proposition 65	WARNING: This product can expose you to chemicals including: Nickel compounds, which is known to the State of California to cause cancer, and Di-isodecyl phthalate (DIDP), which is known to the State of California to cause birth defects or other reproductive harm. For more information go to www.P65Warnings.ca.gov

Dimensions Drawings
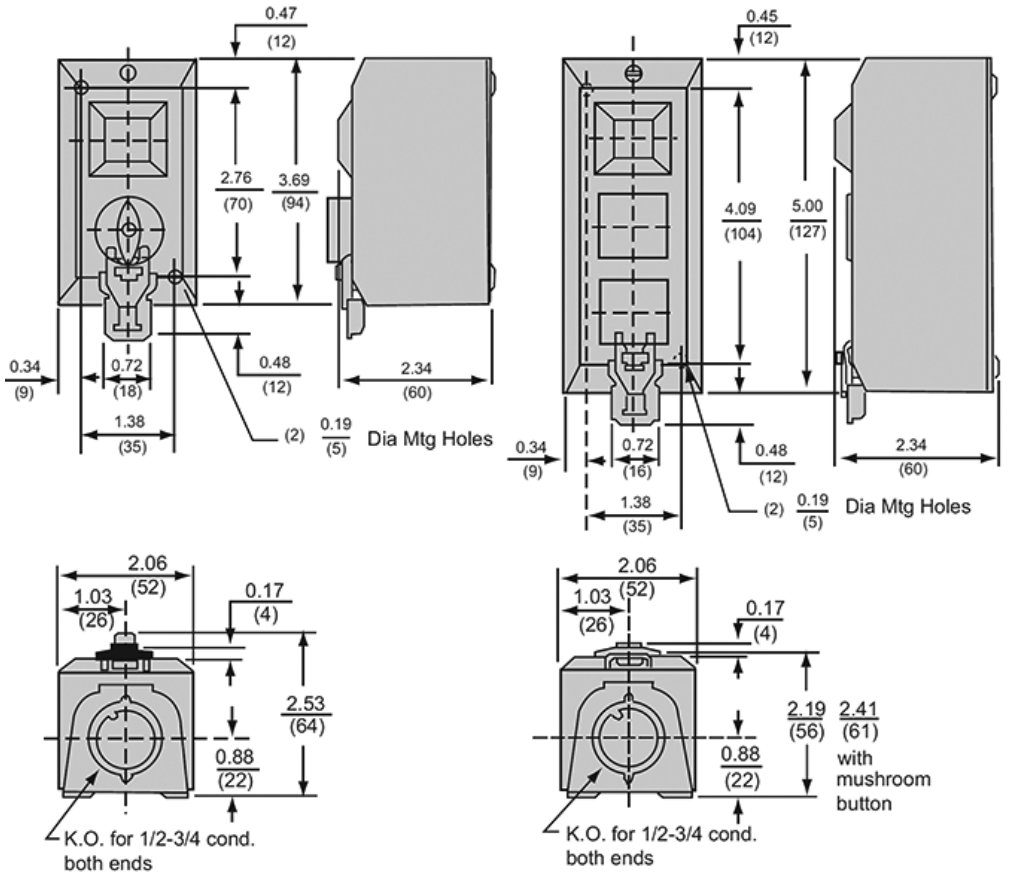
Approximate Dimensions