# Product data sheet

Specifications

## Complete control station, Harmony 9001B, selector switch, hand-off-auto, 5A, 600V AC, NEMA 1

9001BG112

**Product availability: Stock - Normally stocked in distribution facility**

**Price*: 86.00 USD**

## Main

| | |
|---|---|
| **Range Of Product** | Harmony 9001B |
| **Product Or Component Type** | Complete control station |
| **Device Short Name** | 9001BG |

## Complementary

| | |
|---|---|
| **Control Station Composition** | 1 push-button HAND-OFF-AUTO |
| **Contacts Type And Composition** | 1 NO + 1 NC |
| **Connections - Terminals** | Screw clamp terminal |
| **[Ie] Rated Operational Current** | 5 A 600 V |
| **Device Mounting** | Surface |
| **Type Of Installation** | Indoor |

## Environment

| | |
|---|---|
| **Nema Degree Of Protection** | NEMA 1 |
| **Product Certifications** | CE<br>CSA LR25490 class 3211 03<br>UL listed file E42259 CCN NKCR |
| **Environmental Characteristic** | Standard environment |

## Ordering and shipping details

| | |
|---|---|
| **Category** | US10CS121421 |
| **Discount Schedule** | 0CS1 |
| **Gtin** | 785901390138 |
| **Returnability** | Yes |
| **Country Of Origin** | US |

## Packing Units

| | |
|---|---|
| **Unit Type Of Package 1** | PCE |
| **Number Of Units In Package 1** | 1 |
| **Package 1 Height** | 2.20 in (5.6 cm) |
| **Package 1 Width** | 2.52 in (6.4 cm) |
| **Package 1 Length** | 4.02 in (10.2 cm) |

Price is “List Price” and may be subject to a trade discount – check with your local distributor or retailer for actual price.

Disclaimer: This documentation is not intended as a substitute for and is not to be used for determining suitability or reliability of these products for specific user applications

| | |
|---|---|
| **Package 1 Weight** | 8.96 oz (254.0 g) |

## Contractual warranty

| | |
|---|---|
| **Warranty** | 18 months |

## Sustainability

**Green Premium™ label** is Schneider Electric's commitment to delivering products with best-in-class environmental performance. Green Premium promises compliance with the latest regulations, transparency on environmental impacts, as well as circular and low-$CO_2$ products.

**Guide to assessing product sustainability** is a white paper that clarifies global eco-label standards and how to interpret environmental declarations.

Learn more about Green Premium >

Guide to assess a product's sustainability >

RoHS/REACh

## Well-being performance

- Reach Free Of Svhc
- Toxic Heavy Metal Free
- Mercury Free
- Rohs Exemption Information — Yes

## Certifications & Standards

| | |
|---|---|
| **Reach Regulation** | REACh Declaration |
| **Eu Rohs Directive** | Pro-active compliance (Product out of EU RoHS legal scope)<br>EU RoHS Declaration |
| **China Rohs Regulation** | China RoHS declaration |
| **Circularity Profile** | End of Life Information |
| **California Proposition 65** | WARNING: This product can expose you to chemicals including: Nickel compounds, which is known to the State of California to cause cancer, and Di-isodecyl phthalate (DIDP), which is known to the State of California to cause birth defects or other reproductive harm. For more information go to www.P65Warnings.ca.gov |

Dimensions Drawings
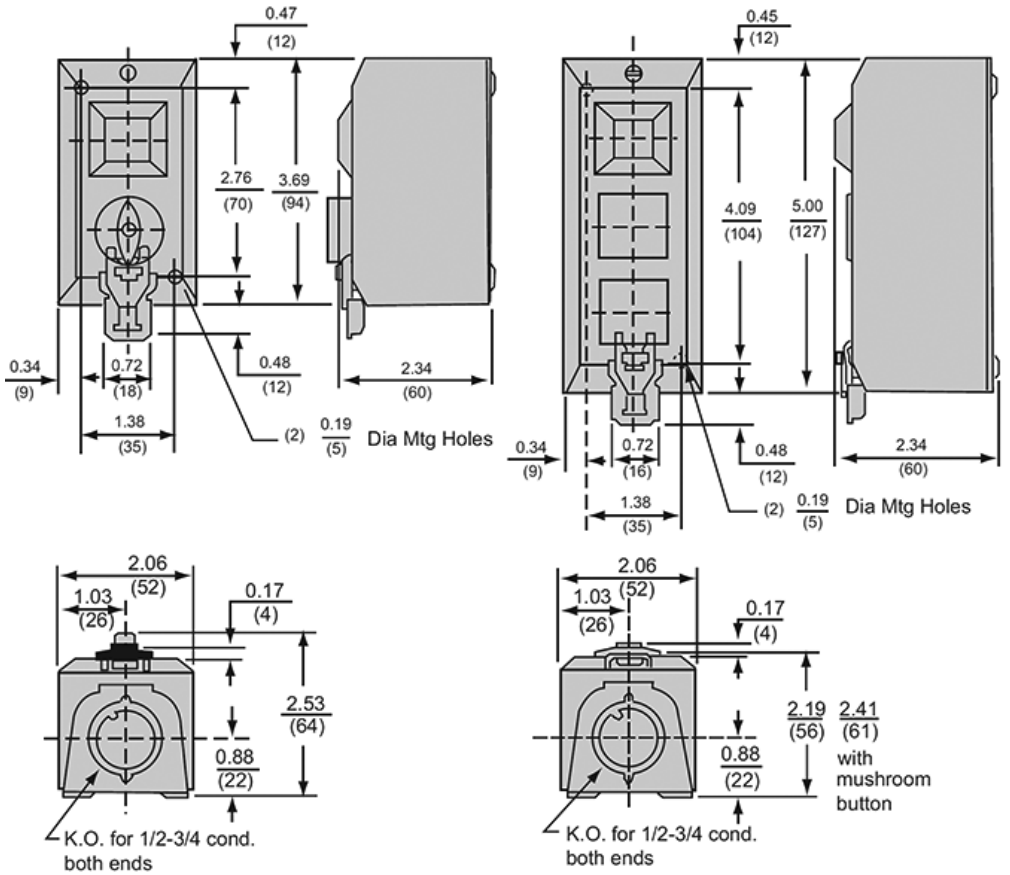
## Approximate Dimensions