Product data sheet

Specifications

Contactor, Type L, multipole lighting, electrically held, 30A, 6 pole, 600V, 110/120VAC 50/60Hz coil, NEMA 1

8903LG60V02

Product availability: Stock - Normally stocked in distribution facility

Price*: 890.00 USD

Main

Product Or Component Type	Electrically Held Lighting Contactor
Range Of Product	8903L
Control Circuit	Separate control circuit

Complementary

Control Circuit Voltage	110 V AC 50 Hz 120 V AC 60 Hz
Inrush Power In Va	150 VA 60 Hz 140 VA 50 Hz
Hold-In Power Consumption In Va	30 VA 60 Hz 30 VA 50 Hz
Current Rating	20 A tungsten 30 A fluorescent
Number Of Poles	6P 6 NO
Control Unit	No control units
Pilot Light	No indicator
Electrical Connection	Screw-clamp terminals
Height	12.68 in (322 mm)
Depth	6.02 in (153 mm)
Width	7.80 in (198 mm)
Net Weight	10.14 lb(US) (4.6 kg)

Environment

Enclosure Type	NEMA 1 painted sheet steel surface
Product Certifications	UL Listed CSA

Ordering and shipping details

Category	US10CP121321
Discount Schedule	0CP1
Gtin	785901851400
Returnability	Yes

Price is “List Price” and may be subject to a trade discount – check with your local distributor or retailer for actual price.

Disclaimer: This documentation is not intended as a substitute for and is not to be used for determining suitability or reliability of these products for specific user applications

Country Of Origin	MX

Packing Units

Unit Type Of Package 1	PCE
Number Of Units In Package 1	1
Package 1 Height	7.40 in (18.8 cm)
Package 1 Width	8.39 in (21.3 cm)
Package 1 Length	13.70 in (34.8 cm)
Package 1 Weight	9.94 lb(US) (4.51 kg)
Unit Type Of Package 2	PAL
Number Of Units In Package 2	50
Package 2 Height	43.50 in (110.49 cm)
Package 2 Width	40.00 in (101.6 cm)
Package 2 Length	48.00 in (121.92 cm)
Package 2 Weight	505.45 lb(US) (229.27 kg)

Contractual warranty

Warranty	18 months

Sustainability

Green Premium™ label is Schneider Electric's commitment to delivering products with best-in-class environmental performance. Green Premium promises compliance with the latest regulations, transparency on environmental impacts, as well as circular and low-CO_2 products.

Guide to assessing product sustainability is a white paper that clarifies global eco-label standards and how to interpret environmental declarations.

Learn more about Green Premium >

Guide to assess a product's sustainability >

Transparency RoHS/REACh

Well-being performance

Reach Free Of Svhc	
Toxic Heavy Metal Free	
Mercury Free	
Rohs Exemption Information	Yes
Pvc Free	
Halogen Free Plastic Parts Product	

Certifications & Standards

Reach Regulation	REACh Declaration
Eu Rohs Directive	Compliant EU RoHS Declaration
China Rohs Regulation	China RoHS declaration Pro-active China RoHS declaration (out of China RoHS legal scope)
Environmental Disclosure	Product Environmental Profile
Circularity Profile	No need of specific recycling operations

Dimensions Drawings
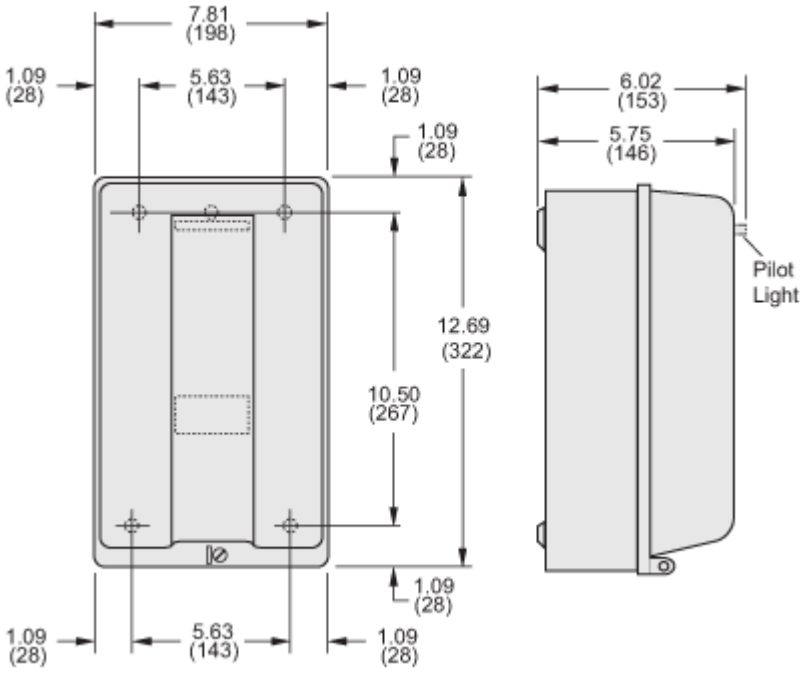
Approximate Dimensions