Product data sheet

Specifications

Contactor, Type L, multipole lighting, electrically held, 30A, 2 pole, 600 V, 440/480 VAC 50/60 Hz coil, NEMA 1

8903LG02V06

Product availability: Non-Stock - Not normally stocked in distribution facility

Main

Product Or Component Type	Electrically Held Lighting Contactor
Range Of Product	8903L
Control Circuit	Separate control circuit

Complementary

Control Circuit Voltage	440 V AC 50 Hz 480 V AC 60 Hz
Inrush Power In Va	150 VA 60 Hz 150 VA 50 Hz
Hold-In Power Consumption In Va	30 VA 60 Hz 30 VA 50 Hz
Current Rating	20 A tungsten 30 A fluorescent
Number Of Poles	2P 2 NC
Control Unit	No control units
Pilot Light	No indicator
Electrical Connection	Screw-clamp terminals
Height	12.68 in (322 mm)
Depth	6.02 in (153 mm)
Width	7.80 in (198 mm)

Environment

Enclosure Type	NEMA 1 painted sheet steel surface
Product Certifications	UL Listed CSA

Ordering and shipping details

Category	21321 - 8903 L (NOT LX)
Discount Schedule	CP1
Returnability	No
Country Of Origin	MX

Packing Units

Unit Type Of Package 1	PCE

Price is “List Price” and may be subject to a trade discount – check with your local distributor or retailer for actual price.

Disclaimer: This documentation is not intended as a substitute for and is not to be used for determining suitability or reliability of these products for specific user applications

Number Of Units In Package 1	1
Package 1 Weight	5.00 lb(US) (2.268 kg)

Contractual warranty

Warranty	18 months

Sustainability

Green Premium™ label is Schneider Electric's commitment to delivering products with best-in-class environmental performance. Green Premium promises compliance with the latest regulations, transparency on environmental impacts, as well as circular and low-CO_2 products.

Guide to assessing product sustainability is a white paper that clarifies global eco-label standards and how to interpret environmental declarations.

Learn more about Green Premium >

Guide to assess a product's sustainability >

Transparency RoHS/REACh

Well-being performance

Reach Free Of Svhc	
Toxic Heavy Metal Free	
Mercury Free	
Rohs Exemption Information	Yes
Pvc Free	
Halogen Free Plastic Parts Product	

Certifications & Standards

Reach Regulation	REACh Declaration
Eu Rohs Directive	Compliant EU RoHS Declaration
China Rohs Regulation	China RoHS declaration Pro-active China RoHS declaration (out of China RoHS legal scope)
Environmental Disclosure	Product Environmental Profile
Circularity Profile	No need of specific recycling operations

Dimensions Drawings
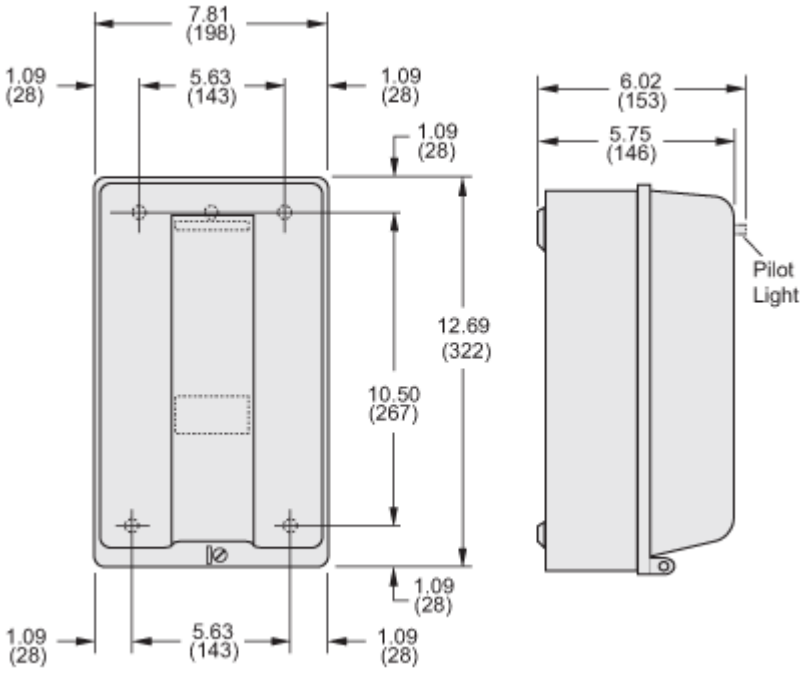
Approximate Dimensions