Product data sheet

Specifications

Green Premium™

discrete I/O module Modicon Momentum - 10I / 8O relay

170ARM37030

Discontinued on: Oct 9, 2023

Discontinued

Product availability: Non-Stock - Not normally stocked in distribution facility

Main

Range Of Product	Modicon Momentum automation platform
Product Or Component Type	Discrete relay I/O base AC
Group Of Channels	2 groups of 4 outputs 1 group of 10 inputs
Discrete Input Number	10 IEC 1131-2 Type 1
Discrete Input Logic	Positive
Discrete Input Voltage	24...230 V AC
Discrete Output Number	8
Discrete Output Type	Relay normally open
Discrete Output Voltage	24...230 V AC
Protective Treatment	TC

Complementary

[Us] Rated Supply Voltage	120 V AC
Input Voltage Limits	- 3...30 V
Voltage State 0 Guaranteed	-3...5 V
Voltage State 1 Guaranteed	11...30 V
Current State 0 Guaranteed	<= 1.2 mA
Current State 1 Guaranteed	>= 2.5 mA
Input Resistance	4 kOhm
Discrete Output Current	<= 0.15 mA 115 V inductive <= 0.5 mA 115 V resistive <= 1 mA 24 V inductive <= 2 mA 24 V resistive >= 0.005 A 24 V
Output Overload Protection	External by varistor in parallel with each contact
Output Short-Circuit Protection	External by varistor in parallel with each contact
Mechanical Durability	30000000 cycles
Electrical Durability	100000 cycles inductive
Response Time	10 ms 60 Hz from state 0 to state 1 on output 10 ms 60 Hz from state 1 to state 0 on output 2.2 ms from state 0 to state 1 on input 3.3 ms from state 1 to state 0 on input
Isolation Between Output Channels Group	1780 V AC

Price is “List Price” and may be subject to a trade discount – check with your local distributor or retailer for actual price.

Disclaimer: This documentation is not intended as a substitute for and is not to be used for determining suitability or reliability of these products for specific user applications

Isolation Between Group Of I/O Channels	1780 V AC
Isolation Between Channels And Bus	500 V AC
Power Dissipation	5.5 W <= 8.5 W
Protection Type	Without protection
Associated Fuse Rating	4 A fast blow operating voltage
Marking	CE
Terminals Description Plc N°1	(8)IN_DIS#8 (4)IN_DIS#4 TB (9)IN_DIS#9 (3)IN_DIS#3 (7)IN_DIS#7 (L1)PW (6)IN_DIS#6 (1)IN_DIS#1 (10)IN_DIS#10 (5)IN_DIS#5 (N)PW (2)IN_DIS#2
Terminals Description Plc N°2	(1)OUT_DIS#1 (1L+)PW (8)OUT_DIS#8 (7)OUT_DIS#7 (5)OUT_DIS#5 (6)OUT_DIS#6 (3)OUT_DIS#3 (4)OUT_DIS#4 (2)OUT_DIS#2 (2L1)PW TB_1
Current Consumption	5 mA 120 V AC
Depth	1.87 in (47.5 mm)
Height	5.57 in (141.5 mm)
Width	4.92 in (125 mm)
Net Weight	0.57 lb(US) (0.26 kg)

Environment

Product Certifications	UL FM Class 1 Division 2 CSA
Resistance To Electrostatic Discharge	4 kV contact IEC 801-2 8 kV on air IEC 801-2
Resistance To Electromagnetic Fields	9.14 V/m (10 V/m) 80...1000 MHz IEC 801-3
Ambient Air Temperature For Operation	32…140 °F (0…60 °C)
Ambient Air Temperature For Storage	-40…185 °F (-40…85 °C)
Relative Humidity	95 % without condensation
Operating Altitude	<= 16404.2 ft (5000 m)

Ordering and shipping details

Category	US1PC3118206
Discount Schedule	PC31
Gtin	3595860033710

Returnability	No
Country Of Origin	FR

Packing Units

Unit Type Of Package 1	PCE
Number Of Units In Package 1	1
Package 1 Height	3.54 in (9 cm)
Package 1 Width	7.09 in (18 cm)
Package 1 Length	10.24 in (26 cm)
Package 1 Weight	18.48 oz (524 g)
Unit Type Of Package 2	S03
Number Of Units In Package 2	6
Package 2 Height	11.81 in (30 cm)
Package 2 Width	11.81 in (30 cm)
Package 2 Length	15.75 in (40 cm)
Package 2 Weight	8.07 lb(US) (3.659 kg)
Unit Type Of Package 3	S04
Number Of Units In Package 3	12
Package 3 Height	11.81 in (30 cm)
Package 3 Width	15.75 in (40 cm)
Package 3 Length	23.62 in (60 cm)
Package 3 Weight	14.90 lb(US) (6.76 kg)

Contractual warranty

Warranty	18 months

Sustainability

Green Premium™ label is Schneider Electric's commitment to delivering products with best-in-class environmental performance. Green Premium promises compliance with the latest regulations, transparency on environmental impacts, as well as circular and low-CO_2 products.

Guide to assessing product sustainability is a white paper that clarifies global eco-label standards and how to interpret environmental declarations.

Learn more about Green Premium >

Guide to assess a product's sustainability >

Transparency RoHS/REACh

Well-being performance

Mercury Free

Rohs Exemption Information Yes

Certifications & Standards

Reach Regulation	REACh Declaration
Eu Rohs Directive	Pro-active compliance (Product out of EU RoHS legal scope)
China Rohs Regulation	China RoHS declaration
Environmental Disclosure	Product Environmental Profile
Weee	The product must be disposed on European Union markets following specific waste collection and never end up in rubbish bins.
Circularity Profile	End of Life Information
California Proposition 65	WARNING: This product can expose you to chemicals including: Lead and lead compounds, which is known to the State of California to cause cancer and birth defects or other reproductive harm. For more information go to www.P65Warnings.ca.gov

Dimensions Drawings

Standard Adapter on a Typical Base

Dimensions

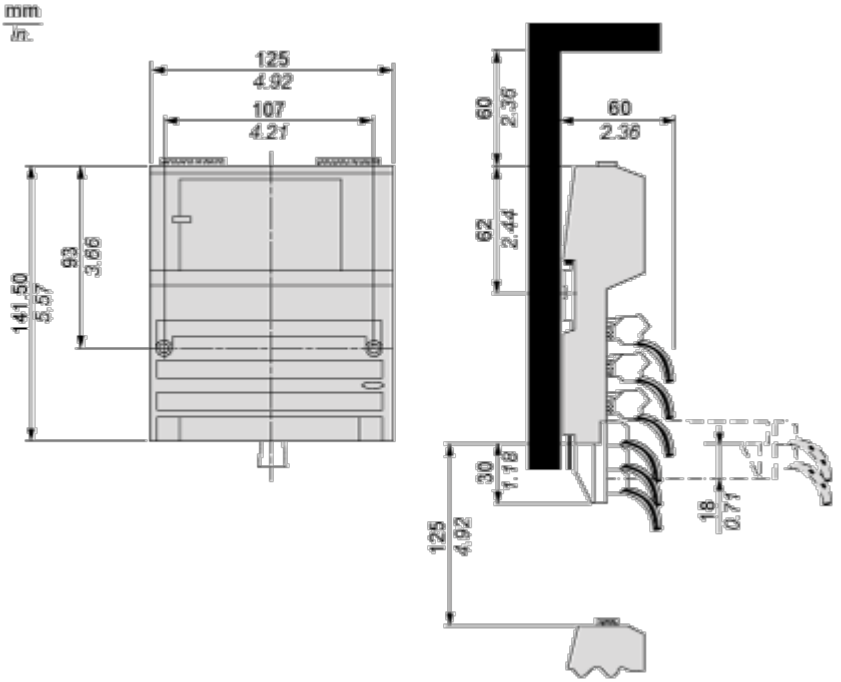

Mounting and Clearance

Mounting on a Wall

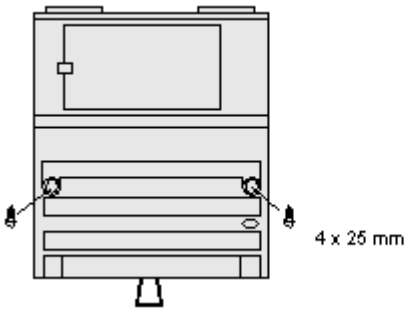

Connections and Schema

External Wiring Diagrams

3-Wire Sensor with a 2-Wire Actuator

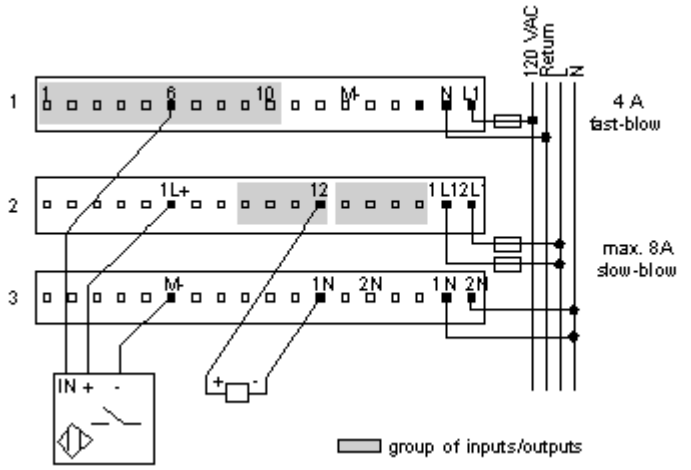

4-Wire Sensor with a 3-Wire Actuator

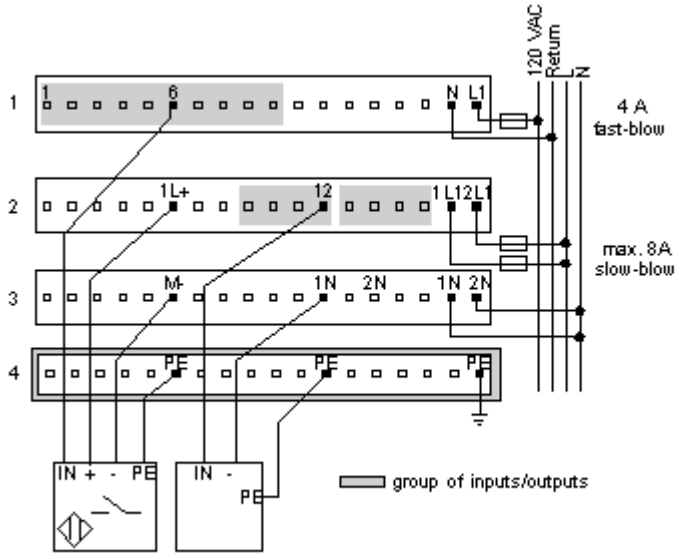

Internal Pin Connections
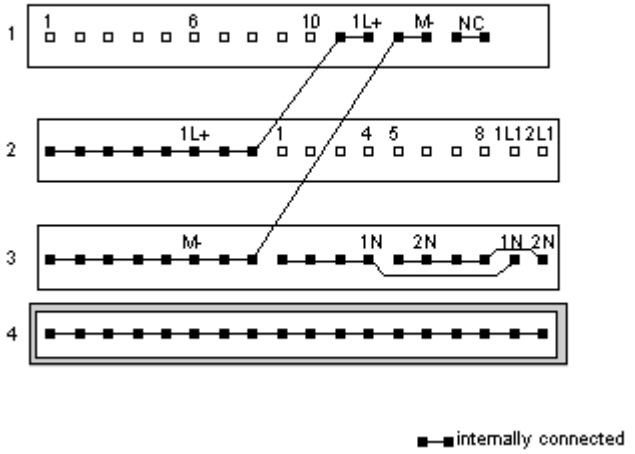
Rows 1 through 3 show the internal connections between terminals on the I/O base. Row 4 shows the internal connections on the optional busbar.