# Product data sheet

Specifications

## discrete output module Modicon Momentum - 16 O solid state

170ADO74050

**Product availability: Non-Stock - Not normally stocked in distribution facility**

## Main

| | |
|---|---|
| **Range Of Product** | Modicon Momentum automation platform |
| **Product Or Component Type** | Discrete output base AC |
| **Group Of Channels** | 2 groups of 8 outputs |
| **Discrete Output Number** | 16 |
| **Discrete Output Type** | Triac |
| **Discrete Output Voltage** | 230 V AC |
| **Current Per Channel** | 0.5 A |
| **Short-Circuit Protection** | Internal fuse, 5 A slow-blow per group |
| **Protective Treatment** | TC |

## Complementary

| | |
|---|---|
| **[Ue] Rated Operational Voltage** | 230 V AC |
| **Discrete Output Current** | 4 A per group<br>8 A per module |
| **Minimum Output Current** | 30 mA |
| **Maximum Leakage Current** | 2.4 mA 230 V AC |
| **Surge Current** | 10 A for 2 cycles<br>15 A for 1 cycle<br>5 A for 3 cycles |
| **Maximum Voltage Drop** | <1.5 V 0.5 A at state 1 |
| **Output Overload Protection** | Internal fuse |
| **Response Time** | 1/2 x 1/f (= 0.5 of one line cycle) from state 0 to state 1<br>1/2 x 1/f (= 0.5 of one line cycle) from state 1 to state 0 |
| **Isolation Between Channels And Bus** | 1780 V AC for 1 minute |
| **Power Dissipation** | 6 W typical<br>7.5 W maximum |
| **Marking** | CE |
| **Local Signalling** | for channel status 16 LEDs |
| **Current Consumption** | 65 mA 230 V AC |

Disclaimer: This documentation is not intended as a substitute for and is not to be used for determining suitability or reliability of these products for specific user applications

Price is “List Price” and may be subject to a trade discount – check with your local distributor or retailer for actual price.

| | |
|---|---|
| **Terminals Description Plc N°1** | (7)OUT_DIS#7<br>(10)OUT_DIS#10<br>(6)OUT_DIS#6<br>(1)OUT_DIS#1<br>(8)OUT_DIS#8<br>(2)OUT_DIS#2<br>(5)OUT_DIS#5<br>(9)OUT_DIS#9<br>(1N)PW<br>(1L+)PW<br>(11)OUT_DIS#11<br>(13)OUT_DIS#13<br>(4)OUT_DIS#4<br>TB<br>(12)OUT_DIS#12<br>(16)OUT_DIS#16<br>(14)OUT_DIS#14<br>(15)OUT_DIS#15<br>(3)OUT_DIS#3 |
| **Depth** | 1.87 in (47.5 mm) |
| **Height** | 5.57 in (141.5 mm) |
| **Width** | 4.92 in (125 mm) |
| **Net Weight** | 0.63 lb(US) (0.284 kg) |

## Environment

| | |
|---|---|
| **Product Certifications** | UL<br>CSA<br>FM Class 1 Division 2 |
| **Resistance To Electrostatic Discharge** | 4 kV contact IEC 801-2<br>8 kV on air IEC 801-2 |
| **Resistance To Electromagnetic Fields** | 9.14 V/m (10 V/m) 80...1000 MHz IEC 801-3 |
| **Ambient Air Temperature For Operation** | 32…140 °F (0…60 °C) |
| **Ambient Air Temperature For Storage** | -40…185 °F (-40…85 °C) |
| **Relative Humidity** | 95 % without condensation |
| **Operating Altitude** | <= 16404.2 ft (5000 m) |

## Ordering and shipping details

| | |
|---|---|
| **Category** | US1PC3118206 |
| **Discount Schedule** | PC31 |
| **Gtin** | 3595861147584 |
| **Returnability** | No |
| **Country Of Origin** | FR |

## Packing Units

| | |
|---|---|
| **Unit Type Of Package 1** | PCE |
| **Number Of Units In Package 1** | 1 |
| **Package 1 Height** | 3.74 in (9.5 cm) |
| **Package 1 Width** | 7.09 in (18.0 cm) |
| **Package 1 Length** | 10.24 in (26.0 cm) |
| **Package 1 Weight** | 17.00 oz (482.0 g) |
| **Unit Type Of Package 2** | S03 |

| | |
|---|---|
| **Number Of Units In Package 2** | 6 |
| **Package 2 Height** | 11.81 in (30.0 cm) |
| **Package 2 Width** | 11.81 in (30.0 cm) |
| **Package 2 Length** | 15.75 in (40.0 cm) |
| **Package 2 Weight** | 6.38 lb(US) (2.892 kg) |

## Contractual warranty

| | |
|---|---|
| **Warranty** | 18 months |

## Sustainability

**Green Premium™ label** is Schneider Electric's commitment to delivering products with best-in-class environmental performance. Green Premium promises compliance with the latest regulations, transparency on environmental impacts, as well as circular and low-$CO_2$ products.

**Guide to assessing product sustainability** is a white paper that clarifies global eco-label standards and how to interpret environmental declarations.

Learn more about Green Premium >

Guide to assess a product's sustainability >

Transparency RoHS/REACh

## Well-being performance

Mercury Free

Rohs Exemption Information Yes

## Certifications & Standards

| | |
|---|---|
| **Reach Regulation** | REACh Declaration |
| **Eu Rohs Directive** | Pro-active compliance (Product out of EU RoHS legal scope) |
| **China Rohs Regulation** | China RoHS declaration |
| **Environmental Disclosure** | Product Environmental Profile |
| **Weee** | The product must be disposed on European Union markets following specific waste collection and never end up in rubbish bins. |
| **Circularity Profile** | End of Life Information |
| **California Proposition 65** | WARNING: This product can expose you to chemicals including: Lead and lead compounds, which is known to the State of California to cause cancer and birth defects or other reproductive harm. For more information go to www.P65Warnings.ca.gov |

Dimensions Drawings

**Standard Adapter on a Discrete VAC Base**

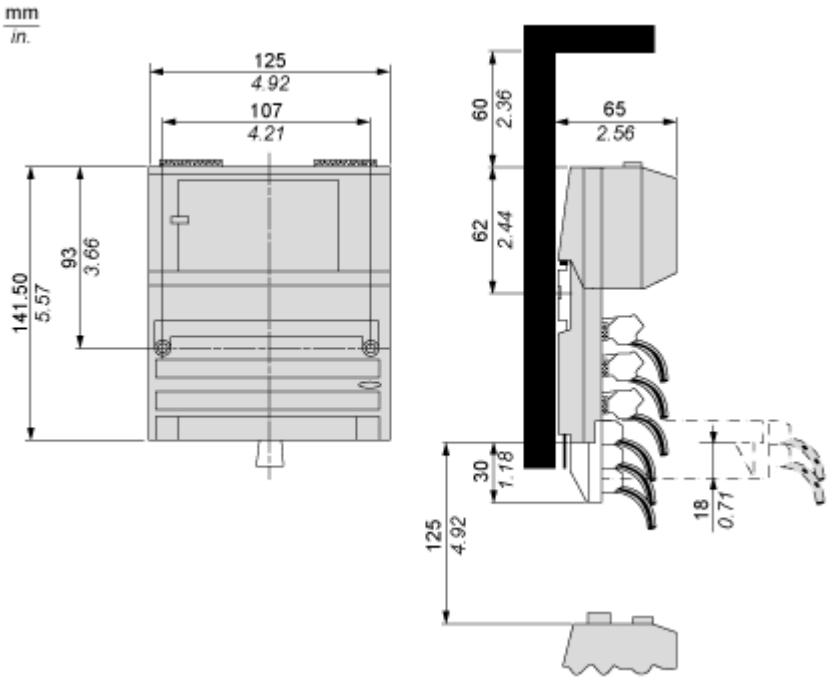

Mounting and Clearance

## Mounting on a Wall

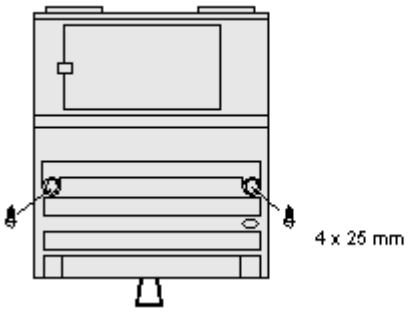

Connections and Schema

## External Wiring Diagrams

### 2-Wire Device

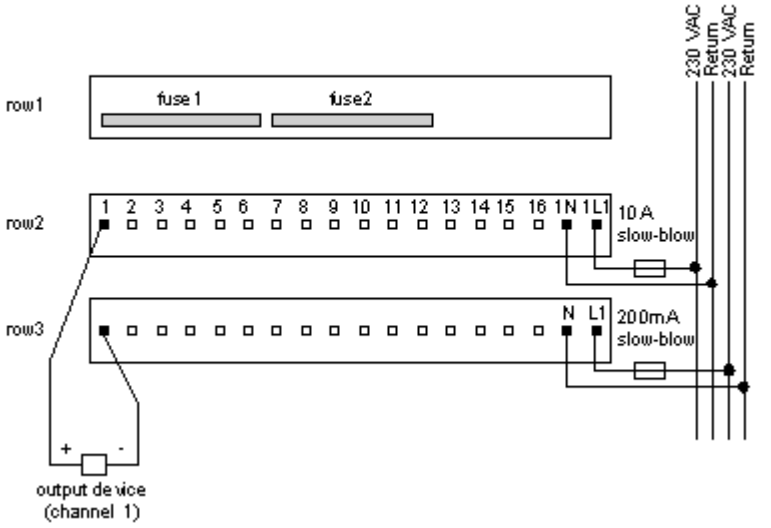


### 3-Wire Device

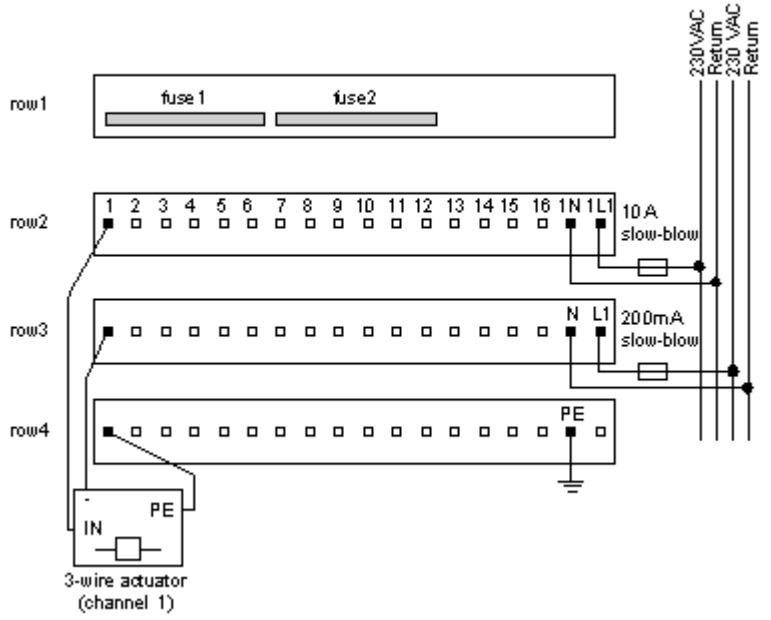

## Internal Pin Connections
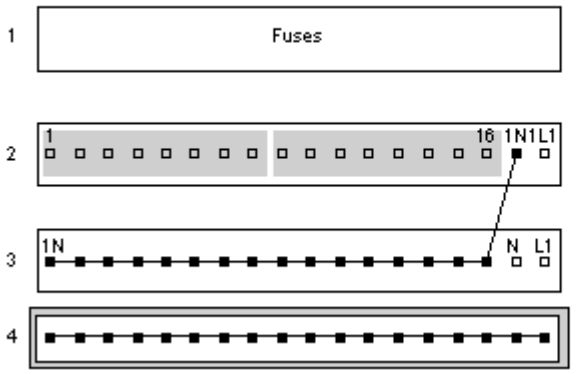
Rows 1 through 3 show the internal connections between terminals on the I/O base. Row 4 shows the internal connections on the optional busbar.