Product data sheet

Specifications

Green Premium™

discrete input module Modicon Momentum - 16 Input 200..240 V AC

170ADI74050

Discontinued on: Oct 9, 2023

Discontinued

Product availability: Non-Stock - Not normally stocked in distribution facility

Main

Range Of Product	Modicon Momentum automation platform
Product Or Component Type	Discrete inputs base AC
Group Of Channels	2 groups of 8 inputs
Discrete Input Number	16 IEC 1131-2 Type 2
Discrete Input Voltage	230 V AC
Protective Treatment	TC

Complementary

Discrete Input Logic	Positive
Input Voltage Limits	164...253 V
Network Frequency	47...63 Hz
Voltage Range	163...253 V
Voltage State 0 Guaranteed	<= 40 V
Voltage State 1 Guaranteed	>= 164 V
Current State 0 Guaranteed	<= 2 mA
Current State 1 Guaranteed	>= 10 mA
Input Resistance	7.5 kOhm 60 Hz 9 kOhm 50 Hz
Response Time	13.3 ms 60 Hz from state 0 to state 1 13.3 ms 60 Hz from state 1 to state 0
Isolation Between Group	1780 V AC
Isolation Between Channels And Bus	1780 V AC

Disclaimer: This documentation is not intended as a substitute for and is not to be used for determining suitability or reliability of these products for specific user applications

Price is “List Price” and may be subject to a trade discount – check with your local distributor or retailer for actual price.

Terminals Description Plc N°1	(8)IN_DIS#8 (7)IN_DIS#7 (5)IN_DIS#5 (16)IN_DIS#16 (12)IN_DIS#12 (2)IN_DIS#2 (14)IN_DIS#14 (15)IN_DIS#15 (N)PW (11)IN_DIS#11 (4)IN_DIS#4 (9)IN_DIS#9 (L1)PW (3)IN_DIS#3 (6)IN_DIS#6 TB (13)IN_DIS#13 (1)IN_DIS#1 (10)IN_DIS#10
Marking	CE
Local Signalling	for channel status 16 LEDs
Current Consumption	<= 125 mA 230 V AC
Depth	1.87 in (47.5 mm)
Height	5.57 in (141.5 mm)
Width	4.92 in (125 mm)
Net Weight	0.63 lb(US) (0.284 kg)

Environment

Product Certifications	CSA UL
Resistance To Electrostatic Discharge	4 kV contact IEC 801-2 8 kV on air IEC 801-2
Resistance To Electromagnetic Fields	9.14 V/m (10 V/m) 80...1000 MHz IEC 801-3
Ambient Air Temperature For Operation	32…140 °F (0…60 °C)
Ambient Air Temperature For Storage	-40…185 °F (-40…85 °C)
Relative Humidity	95 % without condensation
Operating Altitude	<= 16404.2 ft (5000 m)

Ordering and shipping details

Category	US1PC3118206
Discount Schedule	PC31
Gtin	3595861147539
Returnability	No
Country Of Origin	FR

Packing Units

Unit Type Of Package 1	PCE
Number Of Units In Package 1	1
Package 1 Height	3.54 in (9.0 cm)
Package 1 Width	7.09 in (18.0 cm)
Package 1 Length	10.24 in (26.0 cm)

Package 1 Weight	16.40 oz (465.0 g)
Unit Type Of Package 2	P06
Number Of Units In Package 2	80
Package 2 Height	41.34 in (105.0 cm)
Package 2 Width	31.50 in (80.0 cm)
Package 2 Length	31.50 in (80.0 cm)
Package 2 Weight	100.75 lb(US) (45.7 kg)

Contractual warranty

Warranty	18 months

Sustainability

Green Premium™ label is Schneider Electric's commitment to delivering products with best-in-class environmental performance. Green Premium promises compliance with the latest regulations, transparency on environmental impacts, as well as circular and low-CO_2 products.

Guide to assessing product sustainability is a white paper that clarifies global eco-label standards and how to interpret environmental declarations.

Learn more about Green Premium >

Guide to assess a product's sustainability >

Transparency RoHS/REACh

Well-being performance

Mercury Free

Rohs Exemption Information	Yes

Certifications & Standards

Reach Regulation	REACh Declaration
Eu Rohs Directive	Pro-active compliance (Product out of EU RoHS legal scope)
China Rohs Regulation	China RoHS declaration
Environmental Disclosure	Product Environmental Profile
Weee	The product must be disposed on European Union markets following specific waste collection and never end up in rubbish bins.
Circularity Profile	End of Life Information
California Proposition 65	WARNING: This product can expose you to chemicals including: Lead and lead compounds, which is known to the State of California to cause cancer and birth defects or other reproductive harm. For more information go to www.P65Warnings.ca.gov

Dimensions Drawings

Standard Adapter on a Discrete VAC Base

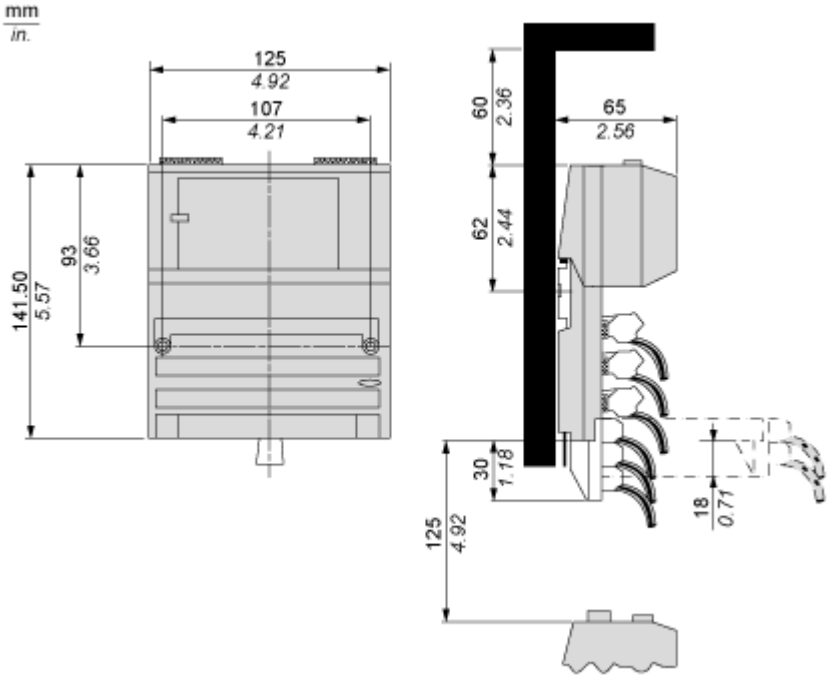

Mounting and Clearance

Mounting on a Wall

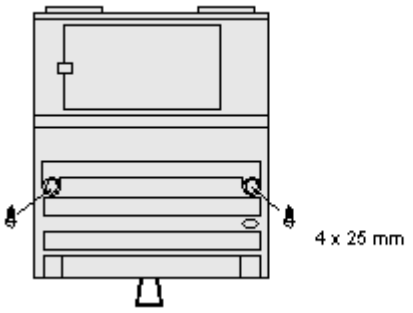

Connections and Schema

External Wiring Diagrams

2-Wire Devices

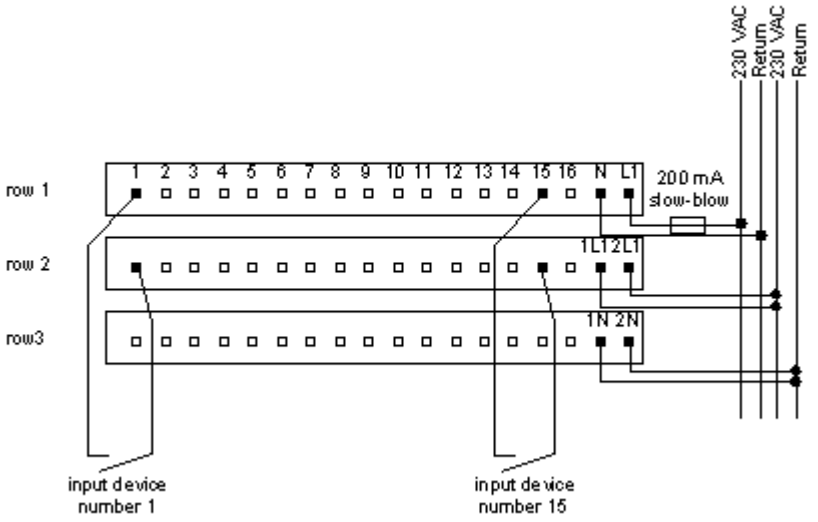

3-Wire Device

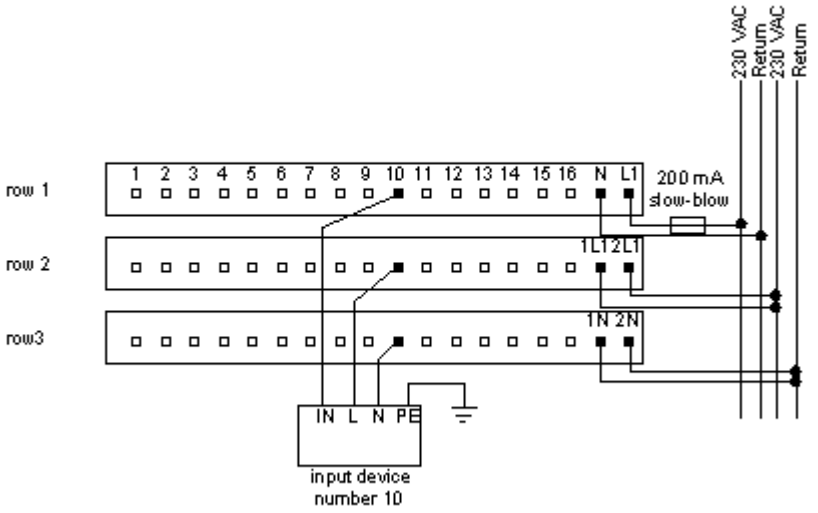
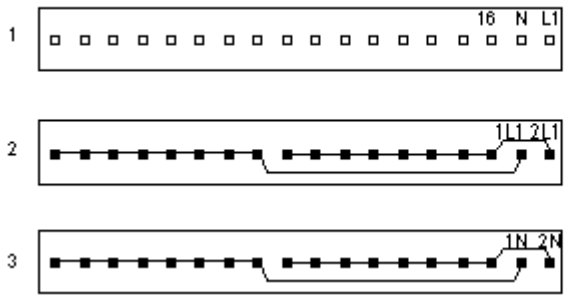
Internal Pin Connections