Product data sheet

Specifications

Green Premium™

distributed analog input Modicon Momentum - Conformal coating - 4 Input

170AAI52040C

Discontinued

Discontinued on: Apr 29, 2022

End-of-service on: Dec 31, 2023

Product availability: Non-Stock - Not normally stocked in distribution facility

Main

Range Of Product	Modicon Momentum automation platform
Product Or Component Type	Analogue input base
Analogue Input Number	4
Analogue Input Type	Differential
Analogue Input Range	+/- 100 mV 15 bits + sign > 10000 kOhm +/- 25 mV 15 bits + sign > 10000 kOhm
Thermocouple Type	Thermocouple R Thermocouple T Thermocouple K Thermocouple N Thermocouple J Thermocouple B Thermocouple E Thermocouple S

Complementary

Data Format	Full 16 bits signed
Temperature Probe Type	Ni 100 0.125 mA +/- 25 mV Ni 1000 0.125 mA +/- 100 mV Pt 100 0.125 mA +/- 25 mV Pt 1000 0.125 mA +/- 100 mV
Update Time	500 ms
Isolation Between Channels	400 V DC
Isolation Between Channels And Ground	500 V AC for 1 minute
Isolation Between Supply And Ground	500 V for 1 minute
Permissible Common Mode Voltage	100 V DC between channels to ground 115 V AC single or three phases between channels 200 V DC between channels 250 V AC between channels to ground 250 V AC single phase between channels
Common Mode Rejection	120 dB DC between channels 130 dB 50 Hz AC between channels 135 dB DC between channels to ground 140 dB 60 Hz AC between channels 145 dB 50 Hz AC between channels to ground 155 dB 60 Hz AC between channels to ground
Serial Mode Rejection	35 dB 50 Hz AC 45 dB 60 Hz AC

Price is “List Price” and may be subject to a trade discount – check with your local distributor or retailer for actual price.

Disclaimer: This documentation is not intended as a substitute for and is not to be used for determining suitability or reliability of these products for specific user applications

External Power Requirement	+/- 30 V DC
Maximum Power Dissipation In W	5.5 W
Reverse Polarity Protection	Internal
Protection Type	Internal 2 A slow-blow
Associated Fuse Rating	500 mA, fast blow
Marking	CE
Local Signalling	for channel status 16 LEDs for channel status 4 LEDs for channel status 32 LEDs
Electrical Connection	2 connectors for removable terminal blocks
Current Consumption	305 mA 24 V DC
Depth	1.87 in (47.5 mm)
Height	4.92 in (125 mm)
Width	5.57 in (141.5 mm)
Net Weight	0.47 lb(US) (0.215 kg)

Environment

Product Certifications	FM Class 1 Division 2 UL CSA
Protective Treatment	Conformal coating Humiseal 1A33 TC
Resistance To Electrostatic Discharge	4 kV contact IEC 801-2 8 kV on air IEC 801-2
Resistance To Electromagnetic Fields	9.14 V/m (10 V/m) 80...1000 MHz IEC 801-3
Ambient Air Temperature For Operation	32…140 °F (0…60 °C)
Ambient Air Temperature For Storage	-40…185 °F (-40…85 °C)
Relative Humidity	95 % without condensation
Operating Altitude	<= 16404.2 ft (5000 m)

Ordering and shipping details

Category	US1PC3118206
Discount Schedule	PC31
Gtin	3595863798296
Returnability	No
Country Of Origin	ID

Packing Units

Unit Type Of Package 1	PCE
Number Of Units In Package 1	1
Package 1 Height	2.24 in (5.700 cm)
Package 1 Width	7.05 in (17.900 cm)
Package 1 Length	10.20 in (25.900 cm)
Package 1 Weight	14.74 oz (418.000 g)

Unit Type Of Package 2	S03
Number Of Units In Package 2	10
Package 2 Height	11.81 in (30.000 cm)
Package 2 Width	11.81 in (30.000 cm)
Package 2 Length	15.75 in (40.000 cm)
Package 2 Weight	8.91 lb(US) (4.040 kg)

Contractual warranty

Warranty	18 months

Sustainability

Green Premium™ label is Schneider Electric's commitment to delivering products with best-in-class environmental performance. Green Premium promises compliance with the latest regulations, transparency on environmental impacts, as well as circular and low-CO_2 products.

Guide to assessing product sustainability is a white paper that clarifies global eco-label standards and how to interpret environmental declarations.

Learn more about Green Premium >

Guide to assess a product's sustainability >

Transparency RoHS/REACh

Well-being performance

Mercury Free

Rohs Exemption Information	Yes

Certifications & Standards

Reach Regulation	REACh Declaration
Eu Rohs Directive	Pro-active compliance (Product out of EU RoHS legal scope)
China Rohs Regulation	China RoHS declaration
Environmental Disclosure	Product Environmental Profile
Weee	The product must be disposed on European Union markets following specific waste collection and never end up in rubbish bins.
Circularity Profile	End of Life Information
California Proposition 65	WARNING: This product can expose you to chemicals including: Lead and lead compounds, which is known to the State of California to cause cancer and birth defects or other reproductive harm. For more information go to www.P65Warnings.ca.gov

Dimensions Drawings

Standard Adapter on a Typical Base

Dimensions

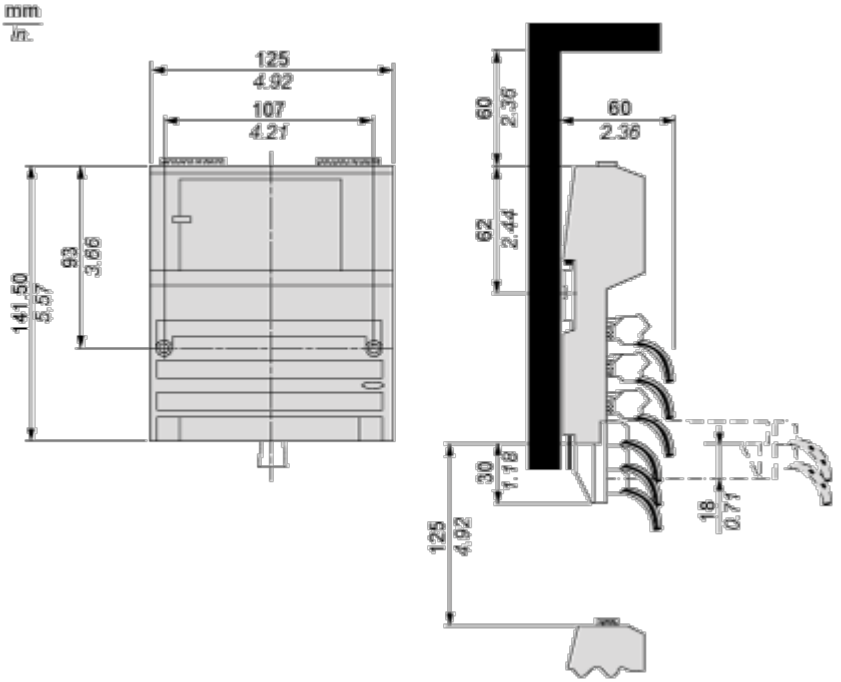

Mounting and Clearance

Mounting on a Wall

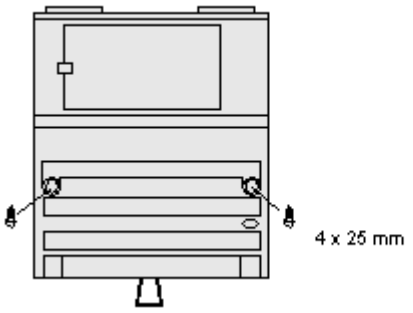

Connections and Schema

External Wiring Diagram

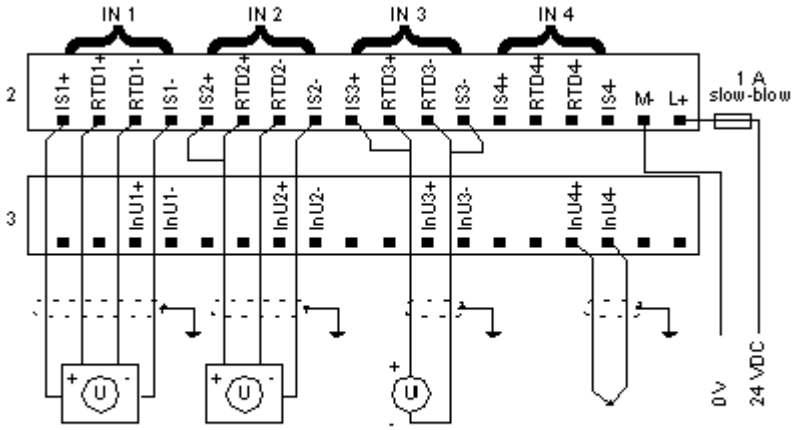

Examples

* Channel 1,RTD input, 4 - wire configuration
* Channel 2,RTD input, 3 - wire configuration
* Channel 3,RTD input, 2 - wire configuration
* Channel 4,thermocouple input
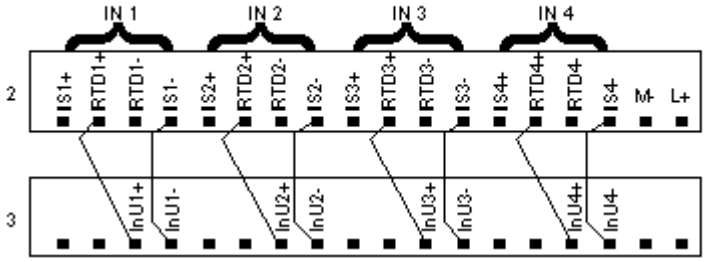
Internal Pin Connections