Product data sheet

Specifications

distributed analog input Modicon Momentum - 8 Input

170AAI03000

Product availability: Stock - Normally stocked in distribution facility

Main

Range Of Product	Modicon Momentum automation platform
Product Or Component Type	Analogue input base
Analogue Input Number	8
Analogue Input Type	Differential
Analogue Input Range	+/- 20 mA 14 bits + sign 250 kOhm 4...20 mA 15 bits + sign 250 kOhm +/- 10 V 14 bits + sign > 0.1 kOhm +/- 5 V 14 bits + sign > 0.1 kOhm 1...5 V 15 bits + sign > 0.1 kOhm

Complementary

Data Format	Full 16 bits signed
Absolute Accuracy Error	+/- 0.13 % full scale 77 °F (25 °C) 1...5 V +/- 0.19 % full scale 140 °F (60 °C) 1...5 V +/- 0.21 % full scale 77 °F (25 °C) +/- 5 V +/- 0.26 % full scale 140 °F (60 °C) +/- 5 V +/- 0.27 % full scale 77 °F (25 °C) +/- 10 V +/- 0.27 % full scale 77 °F (25 °C) 4...20 mA +/- 0.32 % full scale 77 °F (25 °C) +/- 20 mA +/- 0.32 % full scale 140 °F (60 °C) +/- 10 V +/- 0.38 % full scale 140 °F (60 °C) 4...20 mA +/- 0.41 % full scale 140 °F (60 °C) +/- 20 mA
Conversion Time	12 ms 8
Isolation Between Channels	+/- 200 V DC for 1 minute
Isolation Between Channels And Ground	500 V AC for 1 minute
Isolation Between Channels And Bus	500 V AC for 1 minute
Permissible Common Mode Voltage	100 V 47...63 Hz DC between channels to ground 250 V 47...63 Hz AC between channels to ground
Common Mode Rejection	> 80 dB between channels to ground
External Power Requirement	< 382 mA DC 20.4...28.8 V DC 24 V DC
Reverse Polarity Protection	Internal
Marking	CE
Local Signalling	for ready 1 LED (green) for channel status 8 LEDs
Electrical Connection	2 connectors for removable terminal blocks
Depth	1.87 in (47.5 mm)
Height	4.92 in (125 mm)

Price is “List Price” and may be subject to a trade discount – check with your local distributor or retailer for actual price.

Disclaimer: This documentation is not intended as a substitute for and is not to be used for determining suitability or reliability of these products for specific user applications

Width	5.57 in (141.5 mm)
Net Weight	0.47 lb(US) (0.215 kg)

Environment

Standards	EN 50081-2 IEC 1131
Product Certifications	FM Class 1 Division 2 CSA UL
Protective Treatment	TC
Resistance To Electrostatic Discharge	4 kV contact IEC 801-2 8 kV on air IEC 801-2
Resistance To Electromagnetic Fields	9.14 V/m (10 V/m) 80...1000 MHz IEC 801-3
Ambient Air Temperature For Operation	32…140 °F (0…60 °C)
Ambient Air Temperature For Storage	-40…185 °F (-40…85 °C)
Relative Humidity	95 % without condensation
Operating Altitude	<= 16404.2 ft (5000 m)

Ordering and shipping details

Category	US1PC3118206
Discount Schedule	PC31
Gtin	3595861147683
Returnability	Yes
Country Of Origin	ID

Packing Units

Unit Type Of Package 1	PCE
Number Of Units In Package 1	1
Package 1 Height	2.17 in (5.5 cm)
Package 1 Width	7.09 in (18.0 cm)
Package 1 Length	10.24 in (26.0 cm)
Package 1 Weight	14.04 oz (398.0 g)

Contractual warranty

Warranty	18 months

Sustainability

Green Premium™ label is Schneider Electric's commitment to delivering products with best-in-class environmental performance. Green Premium promises compliance with the latest regulations, transparency on environmental impacts, as well as circular and low-CO_2 products.

Guide to assessing product sustainability is a white paper that clarifies global eco-label standards and how to interpret environmental declarations.

Learn more about Green Premium >

Guide to assess a product's sustainability >

Transparency RoHS/REACh

Well-being performance

Mercury Free

Rohs Exemption Information	Yes

Certifications & Standards

Reach Regulation	REACh Declaration
Eu Rohs Directive	Pro-active compliance (Product out of EU RoHS legal scope)
China Rohs Regulation	China RoHS declaration
Environmental Disclosure	Product Environmental Profile
Weee	The product must be disposed on European Union markets following specific waste collection and never end up in rubbish bins.
Circularity Profile	End of Life Information
California Proposition 65	WARNING: This product can expose you to chemicals including: Lead and lead compounds, which is known to the State of California to cause cancer and birth defects or other reproductive harm. For more information go to www.P65Warnings.ca.gov

Dimensions Drawings

Standard Adapter on a Typical Base

Dimensions

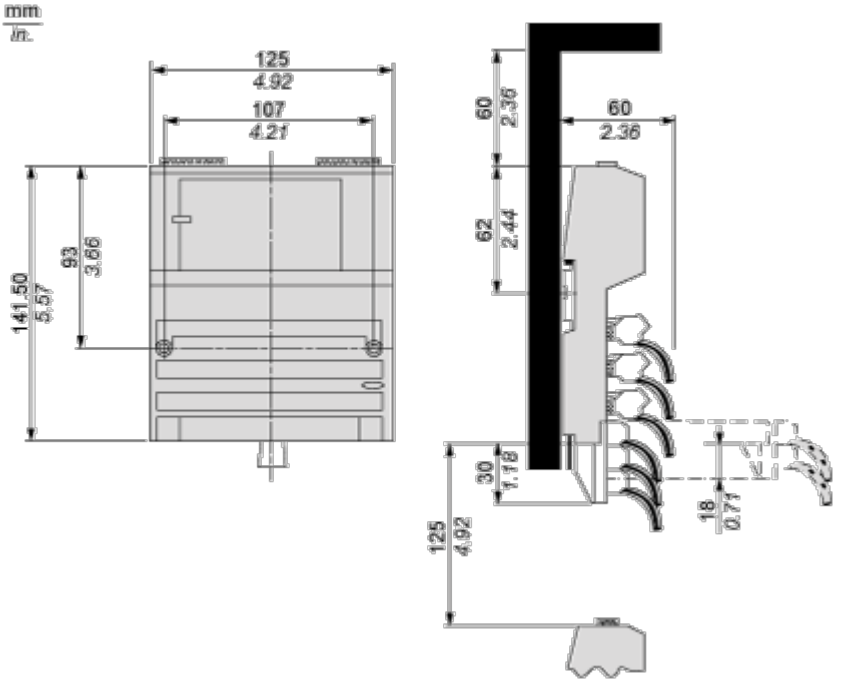

Mounting and Clearance

Mounting on a Wall

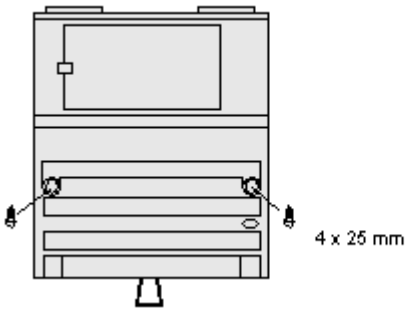

Connections and Schema

External Wiring Diagram

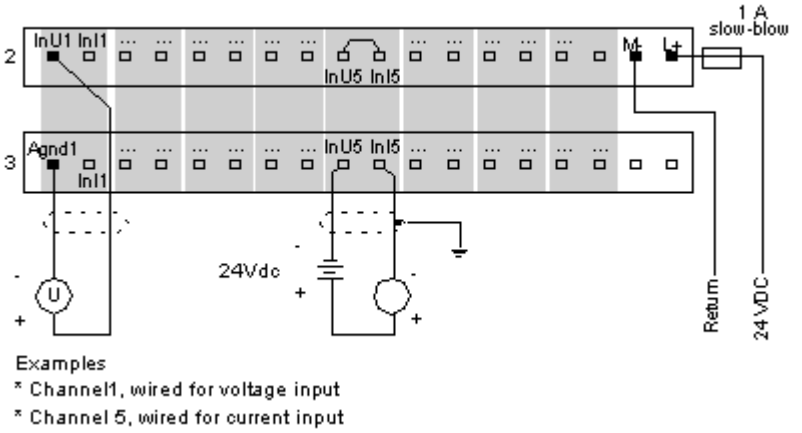
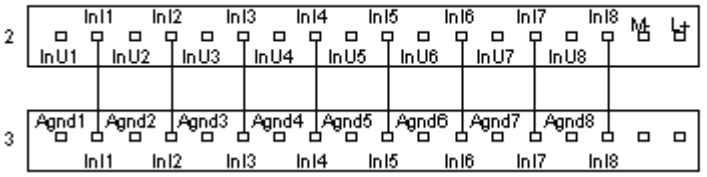
Internal Pin Connections