Product data sheet

Specifications

Green Premium™

multifunction input module Modicon Quantum - 32 I - IRIG-B - DCF77

140ERT85420

Discontinued on: Dec 31, 2022

To be end-of-service on: Dec 31, 2030

Discontinued - Service only

Product availability: Non-Stock - Not normally stocked in distribution facility

Main

Range Of Product	Modicon Quantum automation platform
Product Or Component Type	Multifunction input module
Number Of Terminals	40

Complementary

Function Of Module	Status logging counting 500 Hz Status monitoring on discrete inputs Time and date stamped event logging
Time Synchronisation Protocol	DCF77 IRIG-B
Product Compatibility	Unity Pro V4.1 - without IRIG-B or TXSNTP100 function Unity Pro V5.0 - without IRIG-B or TXSNTP100 function Unity Pro V6.0 - without IRIG-B or TXSNTP100 function Unity Pro V7.0
Group Of Channels	2 groups of 16 inputs process input
Discrete Input Number	1 24 V clock signal input 32 24...125 V process input
Switching Voltage	125 V 1 mA process input 24 V 6 mA process input 48 V 2.5 mA process input 60 V 2.5 mA process input
Maximum Power Consumption In W	7.5 W process input
Insulation	By optocoupler clock signal input
Insulation Between Group Of Channels	By optocoupler
Anti Bounce Filtering	Configurable from 0 to 255 ms
Input State	Inversion configurable
Acquisition Time	1 ms clock signal input
Input Current	5 mA clock signal input
Electrical Connection	Cable - shielded cable <1968.50 ft (600 m) process input Cable - unshielded cable <1312.34 ft (400 m) process input
Connections - Terminals	Screw terminal block
Local Signalling	for communication on the bus (Active) 1 LED (green) for self test OK, module ready (R) 1 LED (green) for fault (F) 1 LED (red) for status of inputs (1 to 32) 32 LEDs

Price is “List Price” and may be subject to a trade discount – check with your local distributor or retailer for actual price.

Disclaimer: This documentation is not intended as a substitute for and is not to be used for determining suitability or reliability of these products for specific user applications

Current Consumption	300 mA 5 V DC bus 20 mA 24...125 V DC external power supply per group of channel
Module Format	Standard
Net Weight	0.99 lb(US) (0.45 kg)

Environment

Resistance To Electrostatic Discharge	4 kV contact IEC 801-2 8 kV on air IEC 801-2
Resistance To Electromagnetic Fields	9.14 V/m (10 V/m) 80...2000 MHz IEC 801-3
Ambient Air Temperature For Operation	32…140 °F (0…60 °C)
Ambient Air Temperature For Storage	-40…185 °F (-40…85 °C)
Relative Humidity	95 % without condensation
Operating Altitude	<= 16404.2 ft (5000 m)
Protective Treatment	TC
Standards	HazLoc UL 508
Product Certifications	UL C-tick CSA Class 1 Division 2 LR GOST Merchant Navy

Ordering and shipping details

Category	US1PC2118155
Discount Schedule	PC21
Gtin	3595864146225
Returnability	No
Country Of Origin	FR

Packing Units

Unit Type Of Package 1	PCE
Number Of Units In Package 1	1
Package 1 Height	1.97 in (5.0 cm)
Package 1 Width	6.50 in (16.5 cm)
Package 1 Length	12.40 in (31.5 cm)
Package 1 Weight	14.99 oz (425.0 g)
Unit Type Of Package 2	S03
Number Of Units In Package 2	7
Package 2 Height	11.81 in (30.0 cm)
Package 2 Width	11.81 in (30.0 cm)
Package 2 Length	15.75 in (40.0 cm)
Package 2 Weight	7.25 lb(US) (3.29 kg)

Contractual warranty

Warranty	18 months

Sustainability

Green Premium™ label is Schneider Electric's commitment to delivering products with best-in-class environmental performance. Green Premium promises compliance with the latest regulations, transparency on environmental impacts, as well as circular and low-CO_2 products.

Guide to assessing product sustainability is a white paper that clarifies global eco-label standards and how to interpret environmental declarations.

Learn more about Green Premium >

Guide to assess a product's sustainability >

RoHS/REACh

Well-being performance

Reach Free Of Svhc	
Mercury Free	
Rohs Exemption Information	Yes

Certifications & Standards

Eu Rohs Directive	Pro-active compliance (Product out of EU RoHS legal scope) EU RoHS Declaration
China Rohs Regulation	China RoHS declaration
Weee	The product must be disposed on European Union markets following specific waste collection and never end up in rubbish bins.
Circularity Profile	End of Life Information
California Proposition 65	WARNING: This product can expose you to chemicals including: Lead and lead compounds, which is known to the State of California to cause cancer and birth defects or other reproductive harm. For more information go to www.P65Warnings.ca.gov

Presentation

Presentation

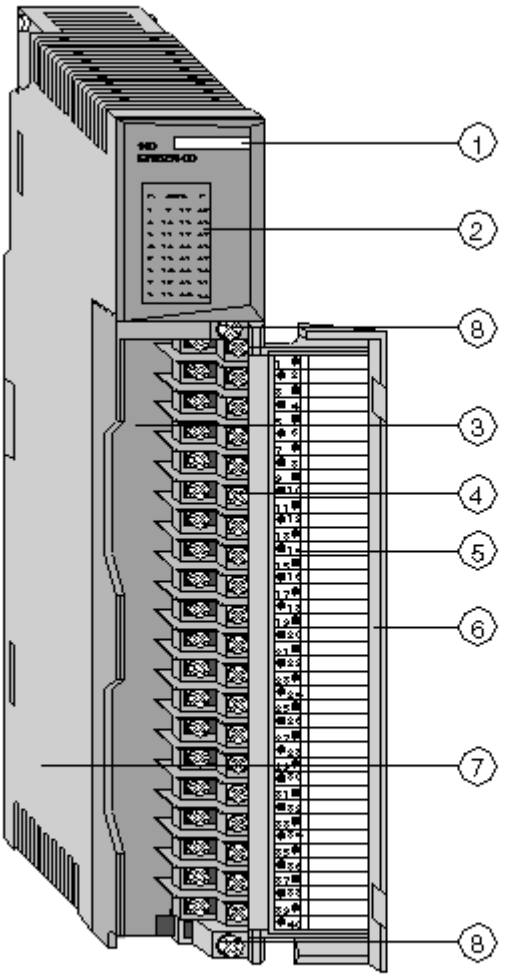

Location of Operating Elements

1 Color Code

2 Display field (LEDs)

3 Terminal Block

4 Connection terminals

5 Sliding Label (inside)

6 Cover for the terminal blocks

7 Standard housing

8 Screws for terminal block

Dimensions Drawings

Racks for Modules Mounting

Dimensions of Modules and Racks

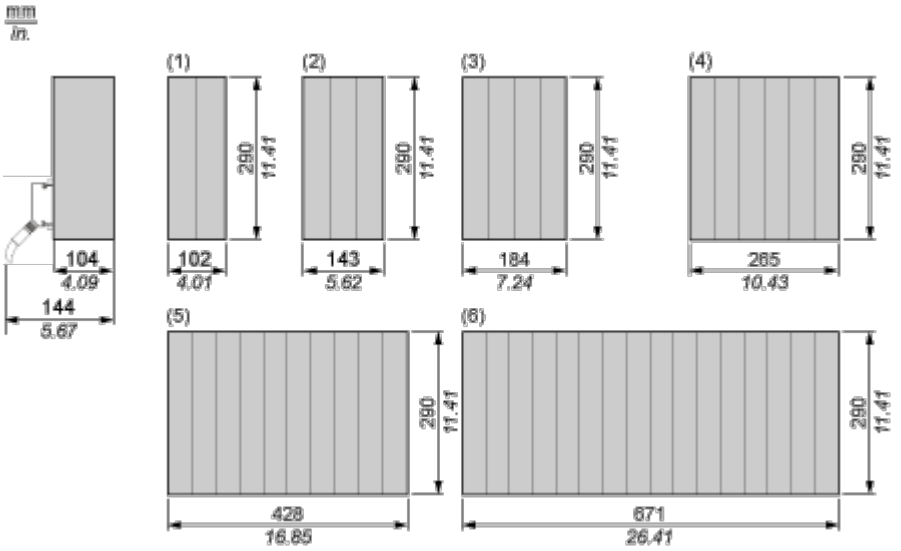

(1) 2 slots

(2) 3 slots

(3) 4 slots

(4) 6 slots

(5) 10 slots

(6) 16 slots

Connections and Schema

Multifunction Input Module

Connecting the DCF77E Time Receiver

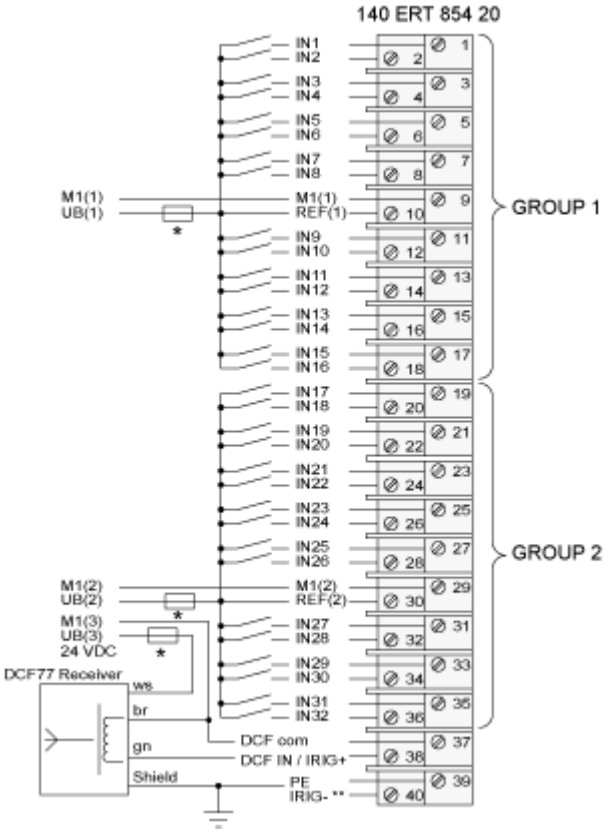

M1(1), M1(2), M1(3) : 0 VDC

* UB(1), UB(2):24...125 VDC, UB(3): 24 VDC separate protection recommended

** not connected

Connecting the DCF77 of GPS Time Receiver

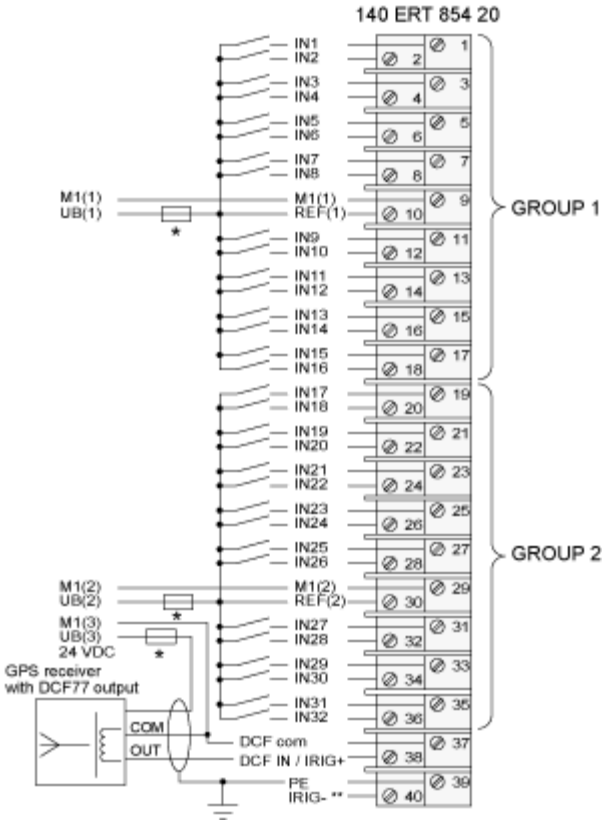

M1(1), M1(2), M1(3) : 0 VDC

* UB(1), UB(2):24...125 VDC, UB(3): 24 VDC separate protection recommended

** not connected

Connecting the IRIG-B of GPS Time Receiver

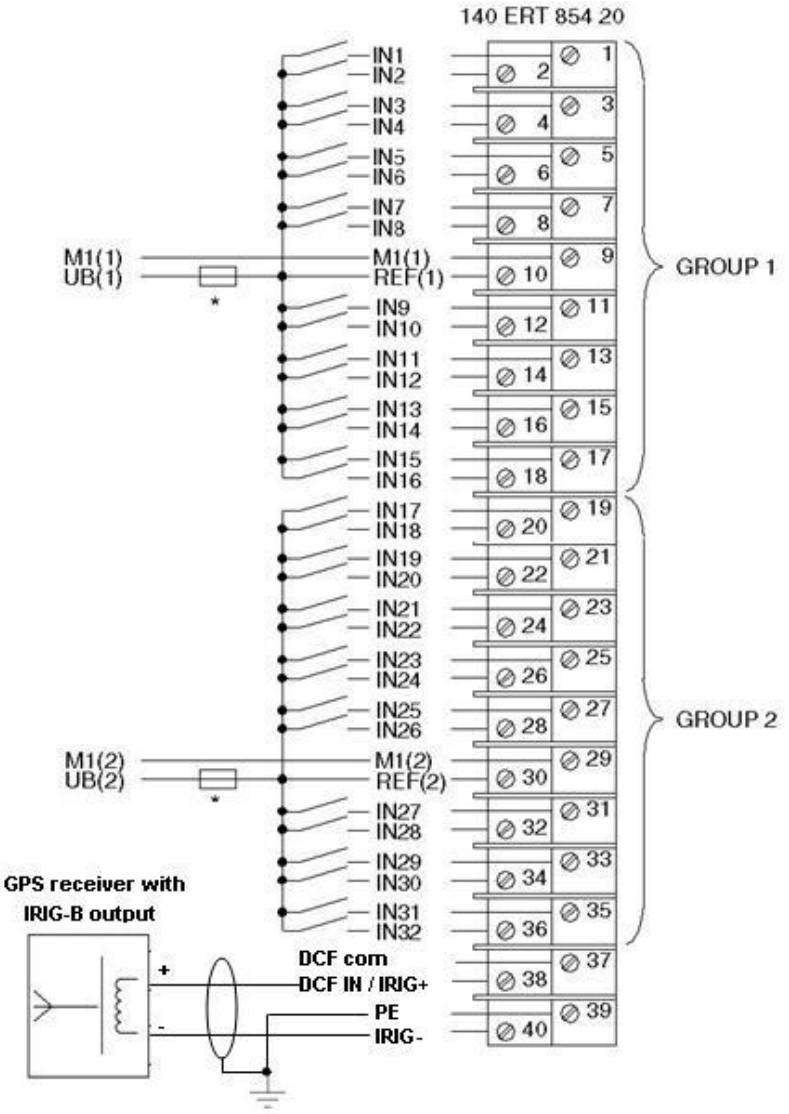

M1(1), M1(2) : 0 VDC

* UB(1), UB(2):24...125 VDC separate protection recommended