Product data sheet

Specifications

Green Premium™

Modicon Quantum - high-speed counter module - 500000 Hz

140EHC20200C

Discontinued on: May 11, 2021

To be end-of-service on: Dec 31, 2029

Discontinued

Main

Range Of Product	Modicon Quantum automation platform
Product Or Component Type	High-speed counter module
Number Of Channels	2

Complementary

Addressing Requirement	6 input words 6 output words
Data Format	2147483647 dec 32 bits 65535 dec 16 bits
Counting Input Type	Incremental or quadrature
Counting Frequency	500000 Hz
Discrete Input Voltage	< 30 V
Operating Mode	Incremental or quadrature discrete input
Input Resistance	10 kOhm discrete input
Operating Threshold	0...11 V single ended mode 24 V DC at state off 0...2 V single ended mode 5 V DC at state on 0 V single ended mode 12 V DC at state on 13...24 V single ended mode 24 V DC at state on 2...7 V single ended mode 12 V DC at state off >= 1.8 V differential mode 3.5...5 V single ended mode 5 V DC at state off
Discrete Output Number	4
Discrete Output Type	Field Effect Transistor (FET)
Discrete Output Voltage	0 V switch off DC 0.4 V switch on DC
Load Current	0.5 A
Maximum Leakage Current	0.4 mA state off
Maximum Voltage Drop	<0.4 V state on
Protection Type	36 V transorb discrete output
Isolation Between Channels And Bus	1780 Vrms 60 s
Fault Type	Loss of output field power
Output Short-Circuit Protection	Blown fuse 2.5 A
Power Dissipation	4 + (0.4 x total module load current)
Bus Current Requirement	650 mA

Price is “List Price” and may be subject to a trade discount – check with your local distributor or retailer for actual price.

Disclaimer: This documentation is not intended as a substitute for and is not to be used for determining suitability or reliability of these products for specific user applications

External Power Requirement	19.2...30 V
Rack Type	Local Remote Distributed
Local Signalling	for channel status 2 LEDs
Marking	CE
Current Consumption	<= 1050 mA 24 V DC external power supply
Module Format	Standard

Environment

Resistance To Electrostatic Discharge	4 kV contact IEC 801-2 8 kV on air IEC 801-2
Resistance To Electromagnetic Fields	9.14 V/m (10 V/m) 80…1000 MHz IEC 801-3
Ambient Air Temperature For Operation	32…140 °F (0…60 °C)
Ambient Air Temperature For Storage	-40…185 °F (-40…85 °C)
Relative Humidity	95 % without condensation
Operating Altitude	<= 16404.2 ft (5000 m)
Protective Treatment	Conformal coating Humiseal 1A33
Standards	UL 508
Product Certifications	CSA No 142 C-Tick.1 FM Class 1 Division 2 UL

Ordering and shipping details

Category	18155-QUANTUM I/O & POWER SUPPLIES
Discount Schedule	PC21
Gtin	3595861136205
Returnability	No
Country Of Origin	FR

Packing Units

Unit Type Of Package 1	PCE
Number Of Units In Package 1	1
Package 1 Height	1.97 in (5.0 cm)
Package 1 Width	6.69 in (17.0 cm)
Package 1 Length	12.40 in (31.5 cm)
Package 1 Weight	16.65 oz (472.0 g)
Unit Type Of Package 2	S02
Number Of Units In Package 2	2
Package 2 Height	5.91 in (15.0 cm)
Package 2 Width	11.81 in (30.0 cm)
Package 2 Length	15.75 in (40.0 cm)
Package 2 Weight	2.85 lb(US) (1.294 kg)

Contractual warranty

Warranty	18 months

Sustainability

Green Premium™ label is Schneider Electric's commitment to delivering products with best-in-class environmental performance. Green Premium promises compliance with the latest regulations, transparency on environmental impacts, as well as circular and low-CO_2 products.

Guide to assessing product sustainability is a white paper that clarifies global eco-label standards and how to interpret environmental declarations.

Learn more about Green Premium >

Guide to assess a product's sustainability >

RoHS/REACh

Well-being performance

Reach Free Of Svhc	
Mercury Free	
Rohs Exemption Information	Yes

Certifications & Standards

Eu Rohs Directive	Pro-active compliance (Product out of EU RoHS legal scope) EU RoHS Declaration
China Rohs Regulation	China RoHS declaration
Weee	The product must be disposed on European Union markets following specific waste collection and never end up in rubbish bins.
Circularity Profile	End of Life Information
California Proposition 65	WARNING: This product can expose you to chemicals including: Lead and lead compounds, which is known to the State of California to cause cancer and birth defects or other reproductive harm. For more information go to www.P65Warnings.ca.gov

Dimensions Drawings

Racks for Modules Mounting

Dimensions of Modules and Racks

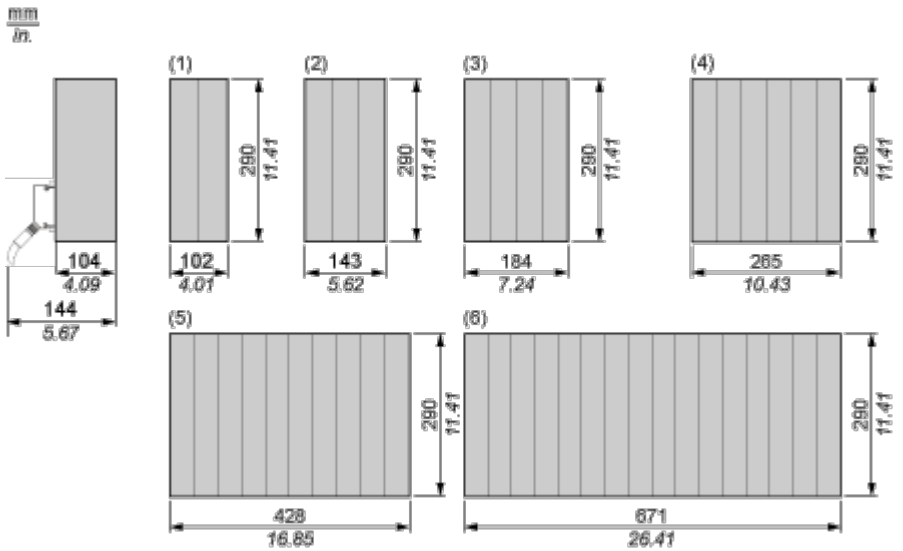

(1) 2 slots

(2) 3 slots

(3) 4 slots

(4) 6 slots

(5) 10 slots

(6) 16 slots

Connections and Schema

Two-Channel High Speed Counter Module

Wiring Diagram for a Single Ended Pulse Encoder

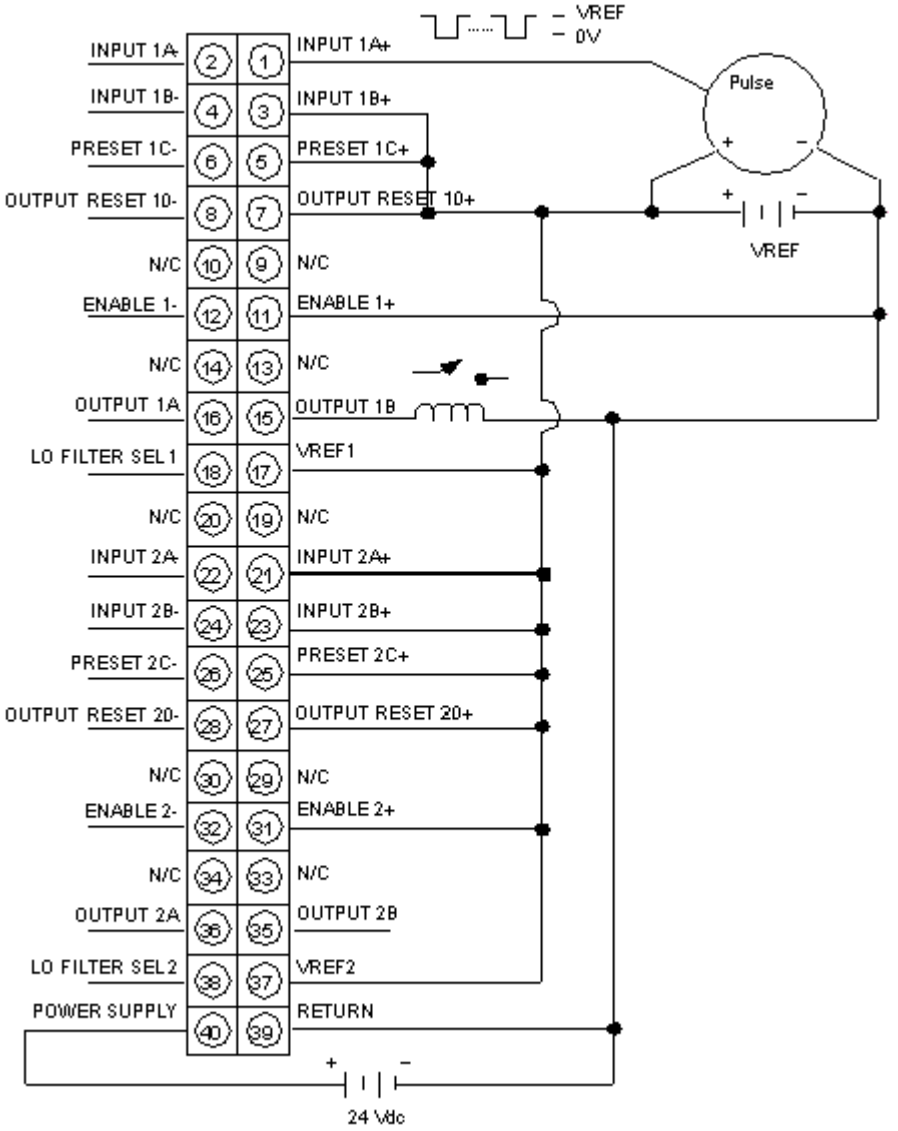

N/C Not Connected

Refer to the user guide for differential pulse encoder input and single ended/differential quadrature encoder input wiring diagrams.