Product data sheet

Specifications

Green Premium™

Modicon Quantum - high-speed counter module - 8 I - 100000 Hz

140EHC10500C

Discontinued on: Mar 15, 2022

Discontinued

Main

Range Of Product	Modicon Quantum automation platform
Product Or Component Type	High-speed counter module
Number Of Channels	5

Complementary

Number Of Inputs	8
Addressing Requirement	12 output words 12 input words
Data Format	2147483647 dec 32 bits 65535 dec 16 bits
Counting Input Voltage	30 V DC max
Counting Input Current	7 mA
Counting Input Type	Discrete incremental counter
Counting Frequency	100000 Hz
Duty Cycle	1/1 counter input
Discrete Input Current	5 mA
Operating Threshold	15...30 V single ended mode 24 V REF DC at state on 3...5 V single ended mode 24 V REF DC at state off
Discrete Output Number	8
Discrete Output Type	Field Effect Transistor (FET)
Discrete Output Voltage	0 V switch off DC 20...30 V switch on DC
Load Current	0.21 A
Maximum Leakage Current	0.1 mA state off
Maximum Voltage Drop	<1.25 V state on
Isolation Between Channels And Bus	500 Vrms 60 s
Fault Type	Loss of output field power
Output Short-Circuit Protection	Internal
Power Dissipation	>= 6 W
Bus Current Requirement	250 mA
External Power Requirement	19.2...30 V

Price is “List Price” and may be subject to a trade discount – check with your local distributor or retailer for actual price.

Disclaimer: This documentation is not intended as a substitute for and is not to be used for determining suitability or reliability of these products for specific user applications

Rack Type	Remote Distributed Local
Local Signalling	for channel status 5 LEDs
Marking	CE
Current Consumption	<= 1140 mA 24 V DC external power supply
Module Format	Standard

Environment

Resistance To Electrostatic Discharge	4 kV contact IEC 801-2 8 kV on air IEC 801-2
Resistance To Electromagnetic Fields	9.14 V/m (10 V/m) 80…1000 MHz IEC 801-3
Ambient Air Temperature For Operation	32…140 °F (0…60 °C)
Ambient Air Temperature For Storage	-40…185 °F (-40…85 °C)
Relative Humidity	95 % without condensation
Operating Altitude	<= 16404.2 ft (5000 m)
Protective Treatment	Conformal coating Humiseal 1A33
Standards	UL 508
Product Certifications	ABS RRS UL C-tick GL GOST DNV CSA Class 1 Division 2 RINA LR

Ordering and shipping details

Category	18155-QUANTUM I/O & POWER SUPPLIES
Discount Schedule	PC21
Gtin	3595861136311
Returnability	No
Country Of Origin	FR

Packing Units

Unit Type Of Package 1	PCE
Number Of Units In Package 1	1
Package 1 Height	1.97 in (5.0 cm)
Package 1 Width	6.50 in (16.5 cm)
Package 1 Length	12.60 in (32.0 cm)
Package 1 Weight	18.69 oz (530.0 g)
Unit Type Of Package 2	S02
Number Of Units In Package 2	2
Package 2 Height	5.91 in (15.0 cm)
Package 2 Width	11.81 in (30.0 cm)

Package 2 Length	15.75 in (40.0 cm)
Package 2 Weight	3.11 lb(US) (1.41 kg)

Contractual warranty

Warranty	18 months

Sustainability

Green Premium™ label is Schneider Electric's commitment to delivering products with best-in-class environmental performance. Green Premium promises compliance with the latest regulations, transparency on environmental impacts, as well as circular and low-CO_2 products.

Guide to assessing product sustainability is a white paper that clarifies global eco-label standards and how to interpret environmental declarations.

Learn more about Green Premium >

Guide to assess a product's sustainability >

RoHS/REACh

Well-being performance

Reach Free Of Svhc	
Mercury Free	
Rohs Exemption Information	Yes

Certifications & Standards

Eu Rohs Directive	Pro-active compliance (Product out of EU RoHS legal scope) EU RoHS Declaration
China Rohs Regulation	China RoHS declaration
Weee	The product must be disposed on European Union markets following specific waste collection and never end up in rubbish bins.
Circularity Profile	End of Life Information
California Proposition 65	WARNING: This product can expose you to chemicals including: Lead and lead compounds, which is known to the State of California to cause cancer and birth defects or other reproductive harm. For more information go to www.P65Warnings.ca.gov

Dimensions Drawings

Racks for Modules Mounting

Dimensions of Modules and Racks

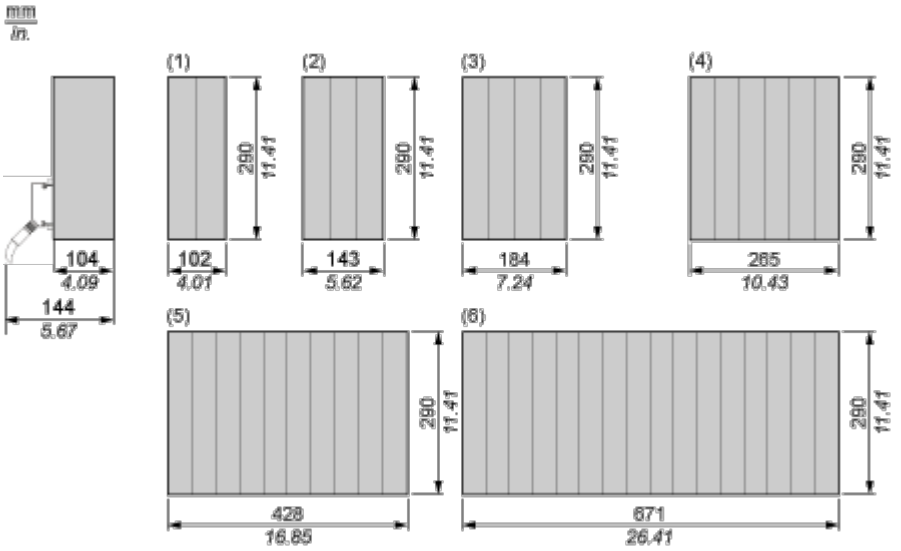

(1) 2 slots

(2) 3 slots

(3) 4 slots

(4) 6 slots

(5) 10 slots

(6) 16 slots

Connections and Schema

Five-Channel Discrete High Speed Counter

Wiring Diagram

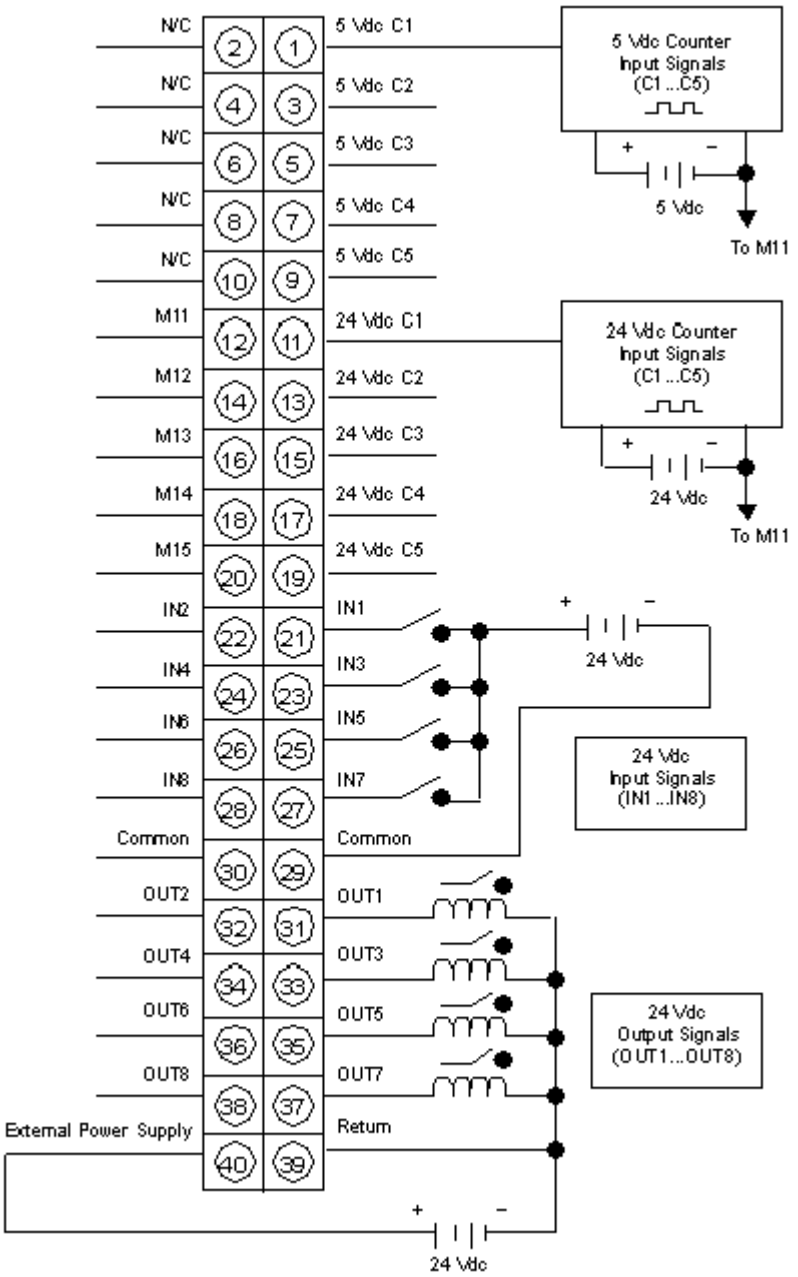

N/C Not Connected

Terminals 29 and 30 are jumpered together.