# Product data sheet

Specifications

Green Premium™

## relay discrete output module Modicon Quantum - 8 O

140DRC83000

Discontinued on: Dec 31, 2022

To be end-of-service on: Dec 31, 2030

Discontinued - Service only

**Product availability: Non-Stock - Not normally stocked in distribution facility**

## Main

| | |
|---|---|
| **Range Of Product** | Modicon Quantum automation platform |
| **Product Or Component Type** | Relay discrete output module |
| **Discrete Output Number** | 8 |

## Complementary

| | |
|---|---|
| **Contacts Type And Composition** | 1 NO/NC |
| **Contact Form** | Form C |
| **Discrete Output Voltage** | 20...250 V AC<br>30...150 V DC<br>5...30 V DC |
| **Addressing Requirement** | 0.5 output word |
| **Maximum Load Current** | 100 mA 30...50 V DC L/R = 10 ms<br>2 A 250/30 V AC/DC tungsten 1/4 hp cos phi = 0.4<br>3 A 250/30 V AC/DC<br>300 mA 30...50 V DC resistive<br>5 A 250/30 V AC/DC resistive 140 °F (60 °C) |
| **Surge Current** | 20 A 10 ms capacitive |
| **Switching Frequency** | 30 Hz resistive<br>F = 0.5/I²L inductive |
| **Switching Capacity In Va** | 1250 VA resistive |
| **Maximum Response Time On Input Open** | 10 ms at state 0 to state 1<br>20 ms at state 1 to state 0 |
| **Mechanical Durability** | 10000000 cycles |
| **Electrical Durability** | 100000 cycles 100 mA 30...150 V DC L/R = 10 ms<br>100000 cycles 30...150 V DC interposing relay<br>100000 cycles 300 mA 30...150 V DC resistive<br>100000 cycles 5 A 30 V DC resistive<br>200000 cycles 5 A 250 V AC resistive<br>50000 cycles 500 mA 30...150 V DC resistive |
| **Output Overvoltage Protection** | Internal by varistor, 275 V |
| **Isolation Between Channels** | 1780 Vrms AC for 1 minute<br>2500 V DC |
| **Isolation Between Channels And Bus** | 1780 Vrms AC for 1 minute<br>2500 V DC for 1 minute |
| **Power Dissipation** | 2.75 W + (0.5 x the number of points on) |
| **Marking** | CE |

Price is “List Price” and may be subject to a trade discount – check with your local distributor or retailer for actual price.

Disclaimer: This documentation is not intended as a substitute for and is not to be used for determining suitability or reliability of these products for specific user applications

| | |
|---|---|
| **Local Signalling** | for bus communication is present (Active) 1 LED (green)<br>for external fault detected (F) 1 LED (red)<br>for input status 8 LEDs (green) |
| **Bus Current Requirement** | 560 mA |
| **Module Format** | Standard |
| **Net Weight** | 0.66 lb(US) (0.3 kg) |

## Environment

| | |
|---|---|
| **Product Certifications** | C-tick<br>GOST<br>GL<br>RMRS<br>FM Class 1 Division 2<br>ABS<br>DNV<br>RINA |
| **Standards** | UL 508<br>CSA C22.2 No 142 |
| **Resistance To Electrostatic Discharge** | 4 kV contact IEC 801-2<br>8 kV on air IEC 801-2 |
| **Resistance To Electromagnetic Fields** | 9.14 V/m (10 V/m) 80…2000 MHz IEC 801-3 |
| **Ambient Air Temperature For Operation** | 32…140 °F (0…60 °C) |
| **Ambient Air Temperature For Storage** | -40…185 °F (-40…85 °C) |
| **Relative Humidity** | 95 % without condensation |
| **Operating Altitude** | <= 16404.2 ft (5000 m) |

## Ordering and shipping details

| | |
|---|---|
| **Category** | US1PC2118155 |
| **Discount Schedule** | PC21 |
| **Gtin** | 3595861127081 |
| **Returnability** | Yes |
| **Country Of Origin** | FR |

## Packing Units

| | |
|---|---|
| **Unit Type Of Package 1** | PCE |
| **Number Of Units In Package 1** | 1 |
| **Package 1 Height** | 6.42 in (16.3 cm) |
| **Package 1 Width** | 1.77 in (4.5 cm) |
| **Package 1 Length** | 12.28 in (31.2 cm) |
| **Package 1 Weight** | 16.75 oz (475.0 g) |
| **Unit Type Of Package 2** | S03 |
| **Number Of Units In Package 2** | 7 |
| **Package 2 Height** | 11.81 in (30.0 cm) |
| **Package 2 Width** | 11.81 in (30.0 cm) |
| **Package 2 Length** | 15.75 in (40.0 cm) |
| **Package 2 Weight** | 7.31 lb(US) (3.318 kg) |

## Contractual warranty

| | |
|---|---|
| **Warranty** | 18 months |

## Sustainability

**Green Premium™ label** is Schneider Electric's commitment to delivering products with best-in-class environmental performance. Green Premium promises compliance with the latest regulations, transparency on environmental impacts, as well as circular and low-$CO_2$ products.

**Guide to assessing product sustainability** is a white paper that clarifies global eco-label standards and how to interpret environmental declarations.

Learn more about Green Premium >

Guide to assess a product's sustainability >

RoHS/REACh

## Well-being performance

| | |
|---|---|
| Reach Free Of Svhc | |
| Mercury Free | |
| Rohs Exemption Information | Yes |

## Certifications & Standards

| | |
|---|---|
| **Eu Rohs Directive** | Pro-active compliance (Product out of EU RoHS legal scope)<br>EU RoHS Declaration |
| **China Rohs Regulation** | China RoHS declaration |
| **Weee** | The product must be disposed on European Union markets following specific waste collection and never end up in rubbish bins. |
| **Circularity Profile** | End of Life Information |
| **California Proposition 65** | WARNING: This product can expose you to chemicals including: Lead and lead compounds, which is known to the State of California to cause cancer and birth defects or other reproductive harm. For more information go to www.P65Warnings.ca.gov |

## Dimensions Drawings

### Racks for Modules Mounting

#### Dimensions of Modules and Racks

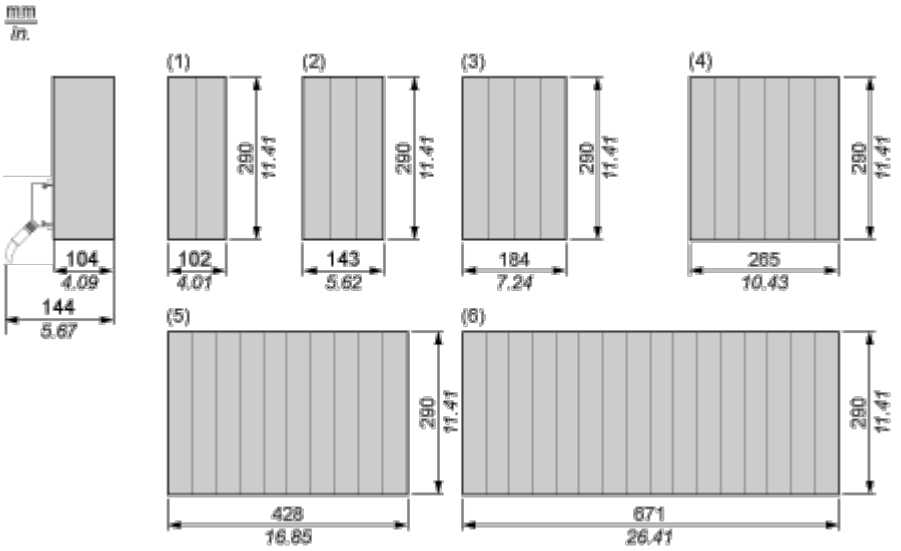


(1) 2 slots

(2) 3 slots

(3) 4 slots

(4) 6 slots

(5) 10 slots

(6) 16 slots

Connections and Schema

## Relay Output Normally Open/Normally Closed Module

### Wiring Diagram

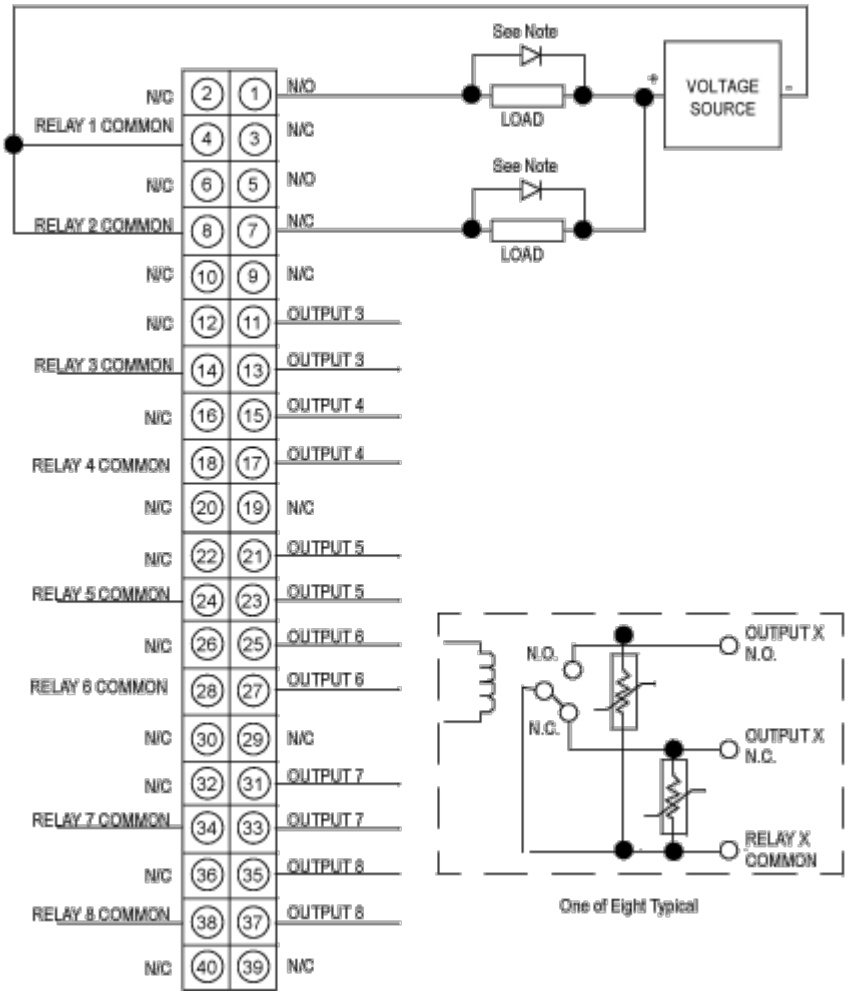


N/C Not Connected

N.O. Normally Open

N.C. Normally Closed