Product data sheet

Specifications

Green Premium™

Modicon Quantum discrete output module - 96 O - negative logic - 6 words

140DDO36400C

Discontinued on: Mar 15, 2022

Discontinued

Product availability: Non-Stock - Not normally stocked in distribution facility

Main

Range Of Product	Modicon Quantum automation platform
Product Or Component Type	Dc discrete output module
Discrete Output Number	96

Complementary

Group Of Channels	6 groups of 16
Discrete Output Logic	Negative logic (sink)
Addressing Requirement	6 output words
Discrete Output Voltage	24 V DC
Output Voltage Limits	19.2...30 V
Maximum Voltage Drop	<0.4 V 0.5 A
Maximum Load Current	<= 0.5 A each point <= 19.2 A per module <= 3.2 A each group
Surge Current	2 A
Response Time	<= 0.1 ms at state 0 to state 1 <= 0.1 ms at state 1 to state 0
Maximum Leakage Current	1 mA 24 V
Short-Circuit Protection	With
Output Overload Protection	With
Load Inductance	Inductance(H) = 0.5/((current(A))² x (switching frequency(Hz))) 0.5...4 Hz
Fault Indication	Fault sensing Loss of field power Fault reporting Fault point
Isolation Between Channels And Bus	500 Vrms DC for 1 minute
Power Dissipation	7 W
Marking	CE
Local Signalling	for bus communication is present (Active) 1 LED (green) for external fault detected (F) 1 LED (red) for input status 96 LEDs (green)
Bus Current Requirement	250 mA
Module Format	Standard

Price is “List Price” and may be subject to a trade discount – check with your local distributor or retailer for actual price.

Disclaimer: This documentation is not intended as a substitute for and is not to be used for determining suitability or reliability of these products for specific user applications

Net Weight	0.99 lb(US) (0.45 kg)

Environment

Protective Treatment	Conformal coating Humiseal 1A33
Product Certifications	RMRS C-tick GOST FM Class 1 Division 2
Standards	CSA C22.2 No 142 UL 508
Resistance To Electrostatic Discharge	4 kV contact IEC 801-2 8 kV on air IEC 801-2
Resistance To Electromagnetic Fields	9.14 V/m (10 V/m) 80…2000 MHz IEC 801-3
Ambient Air Temperature For Operation	32…140 °F (0…60 °C)
Ambient Air Temperature For Storage	-40…185 °F (-40…85 °C)
Relative Humidity	95 % without condensation
Operating Altitude	<= 16404.2 ft (5000 m)

Ordering and shipping details

Category	US1PC2118155
Discount Schedule	PC21
Gtin	3595862015332
Returnability	No
Country Of Origin	CN

Packing Units

Unit Type Of Package 1	PCE
Number Of Units In Package 1	1
Package 1 Height	1.77 in (4.5 cm)
Package 1 Width	6.50 in (16.5 cm)
Package 1 Length	12.40 in (31.5 cm)
Package 1 Weight	19.72 oz (559.0 g)
Unit Type Of Package 2	S02
Number Of Units In Package 2	2
Package 2 Height	5.91 in (15.0 cm)
Package 2 Width	11.81 in (30.0 cm)
Package 2 Length	15.75 in (40.0 cm)
Package 2 Weight	2.46 lb(US) (1.118 kg)

Contractual warranty

Warranty	18 months

Sustainability

Green Premium™ label is Schneider Electric's commitment to delivering products with best-in-class environmental performance. Green Premium promises compliance with the latest regulations, transparency on environmental impacts, as well as circular and low-CO_2 products.

Guide to assessing product sustainability is a white paper that clarifies global eco-label standards and how to interpret environmental declarations.

Learn more about Green Premium >

Guide to assess a product's sustainability >

RoHS/REACh

Well-being performance

Reach Free Of Svhc	
Mercury Free	
Rohs Exemption Information	Yes

Certifications & Standards

Eu Rohs Directive	Pro-active compliance (Product out of EU RoHS legal scope) EU RoHS Declaration
China Rohs Regulation	China RoHS declaration
Weee	The product must be disposed on European Union markets following specific waste collection and never end up in rubbish bins.
Circularity Profile	End of Life Information
California Proposition 65	WARNING: This product can expose you to chemicals including: Lead and lead compounds, which is known to the State of California to cause cancer and birth defects or other reproductive harm. For more information go to www.P65Warnings.ca.gov

Dimensions Drawings

Racks for Modules Mounting

Dimensions of Modules and Racks

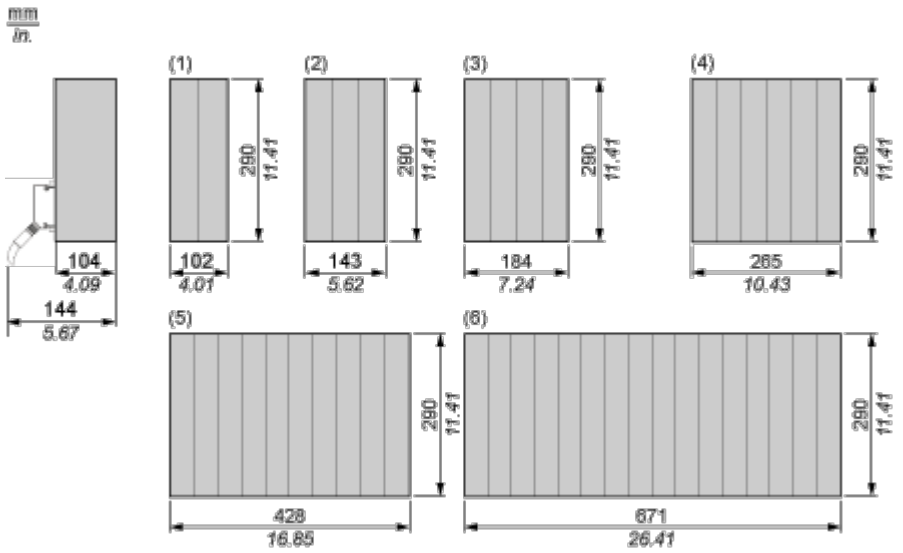

(1) 2 slots

(2) 3 slots

(3) 4 slots

(4) 6 slots

(5) 10 slots

(6) 16 slots

Connections and Schema

24 Vdc 6x16 Output Module
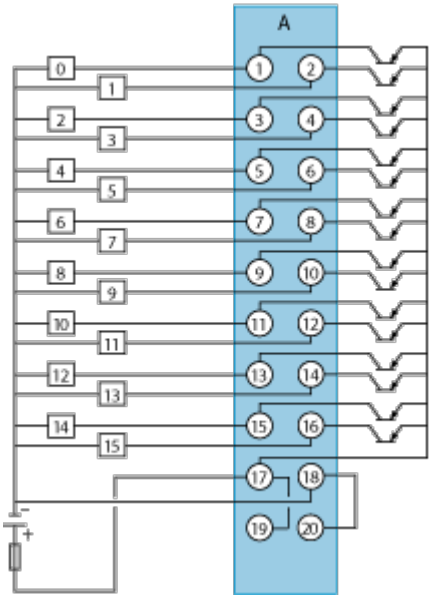
6 Groups of 16 Outputs A...F (6 x HE 10 Connectors)