# Product data sheet

Specifications

Green Premium™

## discrete output module Modicon Quantum - 32 O - negative logic (sink)

140DDO35310

Discontinued on: Dec 31, 2022

To be end-of-service on: Dec 31, 2030

Discontinued - Service only

**Product availability: Non-Stock - Not normally stocked in distribution facility**

## Main

| | |
|---|---|
| **Range Of Product** | Modicon Quantum automation platform |
| **Product Or Component Type** | Dc discrete output module |
| **Discrete Output Number** | 32 |

## Complementary

| | |
|---|---|
| **Group Of Channels** | 4 groups of 8 |
| **Discrete Output Logic** | Negative logic (sink) |
| **Addressing Requirement** | 2 output words |
| **Discrete Output Voltage** | 24 V DC |
| **Output Voltage Limits** | 19.2...30 V |
| **Absolute Maximum Output** | 50 V 1 s decaying pulse |
| **Maximum Voltage Drop** | <0.4 V 0.5 A |
| **Maximum Load Current** | 16 A per module<br>4 A per group |
| **Surge Current** | 5 A 1 ms |
| **Response Time** | <= 1 ms at state 0 to state 1<br><= 1 ms at state 1 to state 0 |
| **Maximum Leakage Current** | 0.4 mA 30 V |
| **Load Inductance** | Inductance(H) = 0.5/((current(A))² x (switching frequency(Hz))) |
| **Maximum Tungsten Load** | 12 W 24 V |
| **Fault Indication** | Loss of field power<br>Blown fuse |
| **Associated Fuse Rating** | 3 A each point<br>5 A per group |
| **Isolation Between Channels And Bus** | 1780 Vrms DC for 1 minute |
| **Isolation Between Group** | 500 Vrms DC for 1 minute |
| **Protection Type** | Internal output protection by 5 A fuse per group |
| **Power Dissipation** | 2.0 W + (0.4 V x total load current) |
| **Marking** | CE |

Price is “List Price” and may be subject to a trade discount – check with your local distributor or retailer for actual price.

Disclaimer: This documentation is not intended as a substitute for and is not to be used for determining suitability or reliability of these products for specific user applications

| | |
|---|---|
| **Local Signalling** | for bus communication is present (Active) 1 LED (green)<br>for external fault detected (F) 1 LED (red)<br>for input status 32 LEDs (green) |
| **Bus Current Requirement** | 330 mA |
| **Module Format** | Standard |
| **Net Weight** | 0.99 lb(US) (0.45 kg) |

## Environment

| | |
|---|---|
| **Product Certifications** | FM Class 1 Division 2<br>RINA<br>GOST<br>C-tick<br>RMRS |
| **Standards** | UL 508<br>CSA C22.2 No 142 |
| **Resistance To Electrostatic Discharge** | 4 kV contact IEC 801-2<br>8 kV on air IEC 801-2 |
| **Resistance To Electromagnetic Fields** | 9.14 V/m (10 V/m) 80…2000 MHz IEC 801-3 |
| **Ambient Air Temperature For Operation** | 32…140 °F (0…60 °C) |
| **Ambient Air Temperature For Storage** | -40…185 °F (-40…85 °C) |
| **Relative Humidity** | 95 % without condensation |
| **Operating Altitude** | <= 16404.2 ft (5000 m) |

## Ordering and shipping details

| | |
|---|---|
| **Category** | US1PC2118155 |
| **Discount Schedule** | PC21 |
| **Gtin** | 3595861135673 |
| **Returnability** | No |
| **Country Of Origin** | FR |

## Packing Units

| | |
|---|---|
| **Unit Type Of Package 1** | PCE |
| **Number Of Units In Package 1** | 1 |
| **Package 1 Height** | 6.42 in (16.3 cm) |
| **Package 1 Width** | 1.77 in (4.5 cm) |
| **Package 1 Length** | 12.28 in (31.2 cm) |
| **Package 1 Weight** | 17.14 oz (486.0 g) |
| **Unit Type Of Package 2** | S03 |
| **Number Of Units In Package 2** | 7 |
| **Package 2 Height** | 11.81 in (30.0 cm) |
| **Package 2 Width** | 11.81 in (30.0 cm) |
| **Package 2 Length** | 15.75 in (40.0 cm) |
| **Package 2 Weight** | 8.56 lb(US) (3.882 kg) |

## Contractual warranty

| | |
|---|---|
| **Warranty** | 18 months |

## Sustainability

**Green Premium™ label** is Schneider Electric's commitment to delivering products with best-in-class environmental performance. Green Premium promises compliance with the latest regulations, transparency on environmental impacts, as well as circular and low-$CO_2$ products.

**Guide to assessing product sustainability** is a white paper that clarifies global eco-label standards and how to interpret environmental declarations.

Learn more about Green Premium >

Guide to assess a product's sustainability >

RoHS/REACh

## Well-being performance

| | |
|---|---|
| Reach Free Of Svhc | |
| Mercury Free | |
| Rohs Exemption Information | Yes |

## Certifications & Standards

| | |
|---|---|
| **Eu Rohs Directive** | Pro-active compliance (Product out of EU RoHS legal scope)<br>EU RoHS Declaration |
| **China Rohs Regulation** | China RoHS declaration |
| **Weee** | The product must be disposed on European Union markets following specific waste collection and never end up in rubbish bins. |
| **Circularity Profile** | End of Life Information |
| **California Proposition 65** | WARNING: This product can expose you to chemicals including: Lead and lead compounds, which is known to the State of California to cause cancer and birth defects or other reproductive harm. For more information go to www.P65Warnings.ca.gov |

## Dimensions Drawings

### Racks for Modules Mounting

#### Dimensions of Modules and Racks

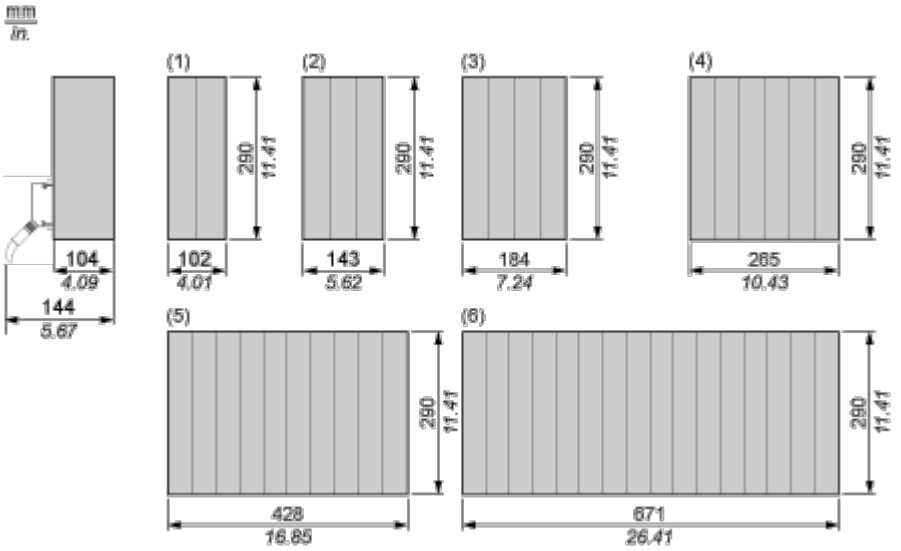


(1) 2 slots

(2) 3 slots

(3) 4 slots

(4) 6 slots

(5) 10 slots

(6) 16 slots

Connections and Schema

## 24 Vdc Discrete Output Sink Module
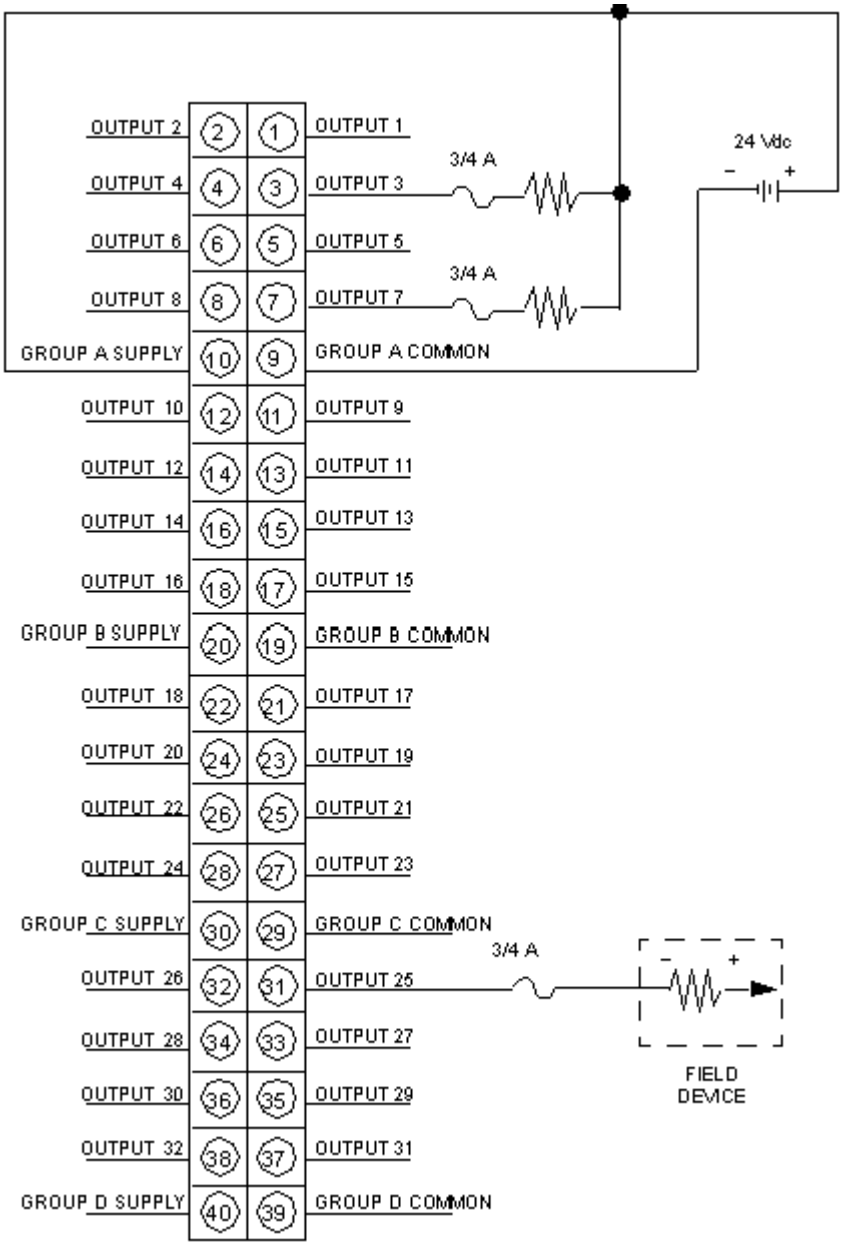
### Wiring Diagram