Product data sheet

Specifications

Green Premium™

discrete output module Modicon Quantum - 16 O - 20..56 V AC

140DAO84220

Discontinued on: Dec 31, 2022

To be end-of-service on: Dec 31, 2030

Discontinued - Service only

Product availability: Non-Stock - Not normally stocked in distribution facility

Main

Range Of Product	Modicon Quantum automation platform
Product Or Component Type	AC discrete output modules
Discrete Output Number	16

Complementary

Group Of Channels	4 groups of 4 channels
Supply Frequency	47...63 Hz
Maximum Voltage Drop	1.5 V
Discrete Output Voltage	20...56 V AC
Addressing Requirement	1 output word
Absolute Maximum Output	100 Vrms 1 cycle AC 63 Vrms 10 s AC 111 Vrms 1.3 s AC
Maximum Load Current	16 A rms per module 4 A rms per group 4 A rms 20...56 V per output
Surge Current	45 A during 1 cycle per group 25 A during 2 cycles per group 30 A during 3 cycles per group
Dv/Dt	400 V/ms
Response Time	<= 0.5 ms at state 0 to state 1 <= 0.5 ms at state 1 to state 0
Fault Indication	Blown fuse Loss of field power
Protection Type	Internal by RC filter Internal output protection by 5 A fuse
Power Dissipation	1.85 + (1.1 V x total module load current)
Marking	CE
Local Signalling	for bus communication is present (Active) 1 LED (green) for external fault detected (F) 1 LED (red) for input status 16 LEDs (green)
Bus Current Requirement	350 mA
Module Format	Standard
Net Weight	0.99 lb(US) (0.45 kg)

Price is “List Price” and may be subject to a trade discount – check with your local distributor or retailer for actual price.

Disclaimer: This documentation is not intended as a substitute for and is not to be used for determining suitability or reliability of these products for specific user applications

Environment

Product Certifications	FM Class 1 Division 2 cUL
Standards	UL 508 CSA C22.2 No 142
Electromagnetic Compatibility	Electrostatic discharge immunity test - test level: 4 kV (contact discharge) conforming to IEC 801-2 Electrostatic discharge immunity test - test level: 8 kV (air discharge) conforming to IEC 801-2 Susceptibility to electromagnetic fields - test level: 10 V/m (80...1000 MHz) conforming to IEC 801-3
Ambient Air Temperature For Operation	32…140 °F (0…60 °C)
Ambient Air Temperature For Storage	-40…185 °F (-40…85 °C)
Relative Humidity	95 % without condensation
Operating Altitude	<= 16404.2 ft (5000 m)

Ordering and shipping details

Category	US1PC2118155
Discount Schedule	PC21
Gtin	3595861126992
Returnability	No
Country Of Origin	FR

Packing Units

Unit Type Of Package 1	PCE
Number Of Units In Package 1	1
Package 1 Height	6.42 in (16.3 cm)
Package 1 Width	1.77 in (4.5 cm)
Package 1 Length	12.28 in (31.2 cm)
Package 1 Weight	22.72 oz (644.0 g)
Unit Type Of Package 2	S02
Number Of Units In Package 2	2
Package 2 Height	5.91 in (15.0 cm)
Package 2 Width	11.81 in (30.0 cm)
Package 2 Length	15.75 in (40.0 cm)
Package 2 Weight	2.83 lb(US) (1.284 kg)

Contractual warranty

Warranty	18 months

Sustainability

Green Premium™ label is Schneider Electric's commitment to delivering products with best-in-class environmental performance. Green Premium promises compliance with the latest regulations, transparency on environmental impacts, as well as circular and low-CO_2 products.

Guide to assessing product sustainability is a white paper that clarifies global eco-label standards and how to interpret environmental declarations.

Learn more about Green Premium >

Guide to assess a product's sustainability >

RoHS/REACh

Well-being performance

Reach Free Of Svhc	
Mercury Free	
Rohs Exemption Information	Yes

Certifications & Standards

Eu Rohs Directive	Pro-active compliance (Product out of EU RoHS legal scope) EU RoHS Declaration
China Rohs Regulation	China RoHS declaration
Weee	The product must be disposed on European Union markets following specific waste collection and never end up in rubbish bins.
Circularity Profile	End of Life Information
California Proposition 65	WARNING: This product can expose you to chemicals including: Lead and lead compounds, which is known to the State of California to cause cancer and birth defects or other reproductive harm. For more information go to www.P65Warnings.ca.gov

Dimensions Drawings

Racks for Modules Mounting

Dimensions of Modules and Racks

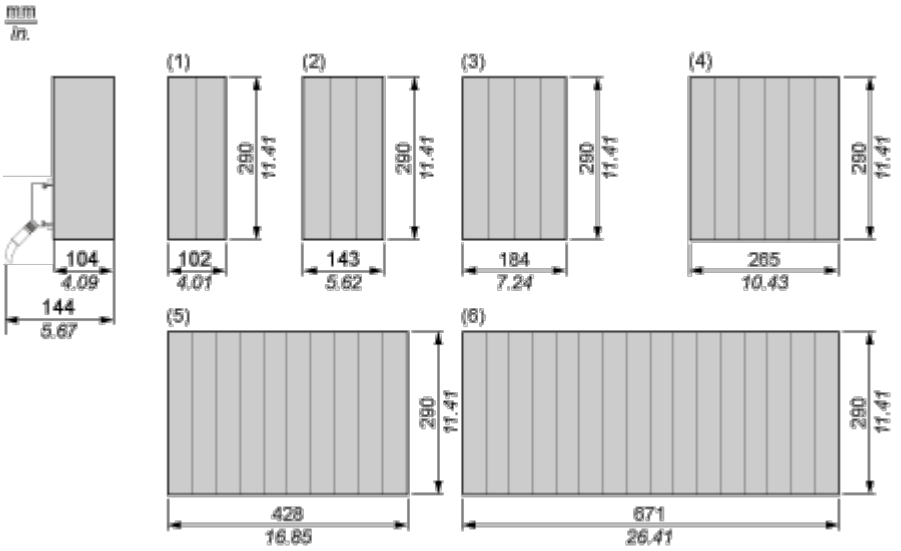

(1) 2 slots

(2) 3 slots

(3) 4 slots

(4) 6 slots

(5) 10 slots

(6) 16 slots

Connections and Schema

24...48 Vac Discrete Output Module

Wiring Diagram

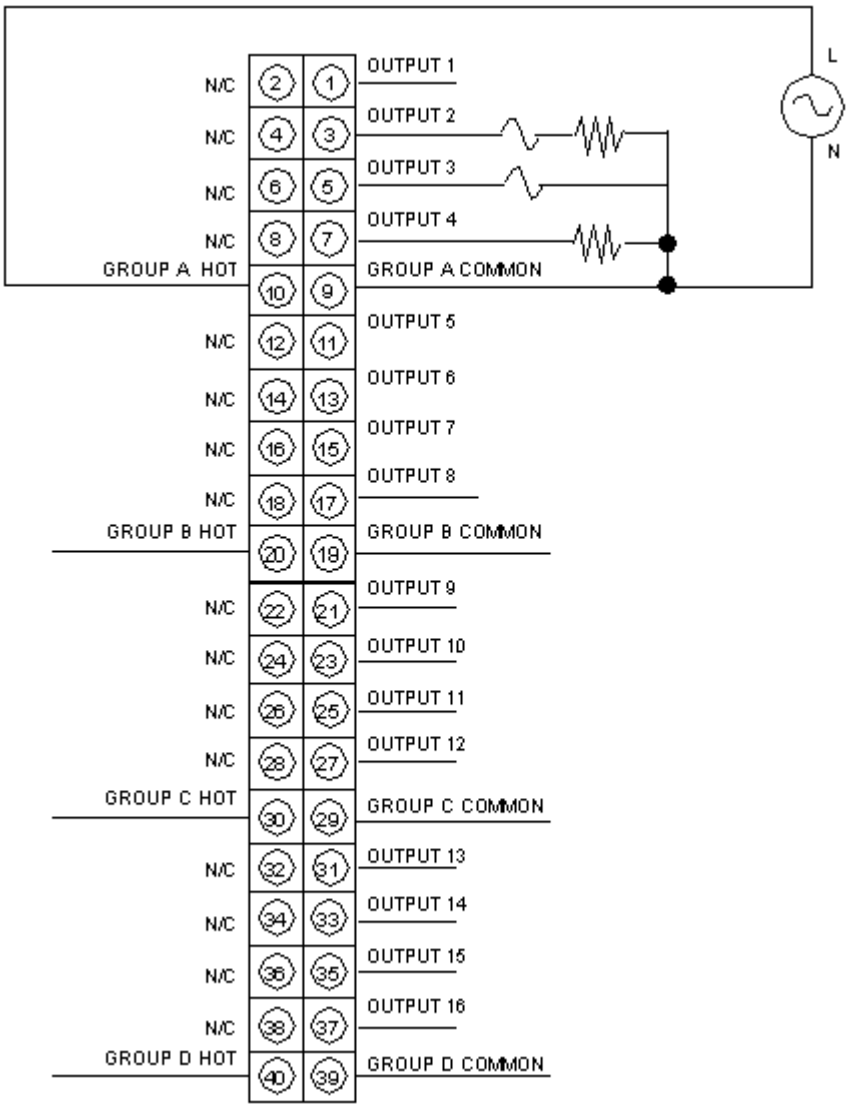

N/C Not Connected