Product data sheet

Specifications

Green Premium™

analog input module Modicon Quantum - 8 I multirang

140AVI03000C

Discontinued on: Mar 15, 2022

Discontinued

Product availability: Non-Stock - Not normally stocked in distribution facility

Main

Range Of Product	Modicon Quantum automation platform
Product Or Component Type	Analogue input module
Type Of Filter	Single pole low pass - 3 dB at 847 Hz +/- 20 %

Complementary

Analogue Input Number	8
Input Type	Differential
Addressing Requirement	9 input words
Analogue Input Type	Bipolar current 20 mA Bipolar voltage +/- 10 V Bipolar voltage +/- 5 V Unipolar current 0...20 mA Unipolar voltage 0...10 V Unipolar voltage 0...5 V
Analogue Input Resolution	16 bits +/- 10 V 16 bits +/- 5 V 16 bits 0...10 V 16 bits 0...20 mA 16 bits 0...5 V 16 bits 20 mA
Linear Measuring Range	(input range) x 1.024 V (input range) x 1.024 mA
Absolute Maximum Input	50 V DC 25 mA
Input Impedance	> 20 Ohm voltage 250 MOhm +/- 0.03 %
Absolute Accuracy Error	+/- 0.03 % +/- 0.05 % of full scale maximum
Linearity Error	+/- 0.008 %
Accuracy Drift According To Temperature	+/- 0.0015 % of full scale/°C <= 0.004 % of full scale /°C
Common Mode Rejection	> - 80 dB 60 Hz
Isolation Between Channels And Bus	500 Vrms AC 60 s 750 V DC
Isolation Between Channels	135 Vrms AC 200 V DC
Update Time	10 ms
Fault Type	Broken wire 4...20 mA Overtacking scale 1...5 V

Price is “List Price” and may be subject to a trade discount – check with your local distributor or retailer for actual price.

Disclaimer: This documentation is not intended as a substitute for and is not to be used for determining suitability or reliability of these products for specific user applications

Marking	CE
Local Signalling	for bus communication is present (Active) 1 LED (green) for external fault 1 LED (red) for channel is turned on 8 LEDs (green) for channel fault 8 LEDs (red)
Bus Current Requirement	280 mA
Power Dissipation In W	2.2 W
Module Format	Standard
Net Weight	0.66 lb(US) (0.3 kg)

Environment

Protective Treatment	Conformal coating Humiseal 1A33
Standards	UL 508 CSA C22.2 No 142
Product Certifications	FM Class 1 Division 2 cUL
Resistance To Electrostatic Discharge	4 kV contact IEC 801-2 8 kV on air IEC 801-2
Resistance To Electromagnetic Fields	9.14 V/m (10 V/m) 80…1000 MHz IEC 801-3
Ambient Air Temperature For Operation	32…140 °F (0…60 °C)
Ambient Air Temperature For Storage	-40…185 °F (-40…85 °C)
Relative Humidity	95 % without condensation
Operating Altitude	<= 16404.2 ft (5000 m)

Ordering and shipping details

Category	US1PC2118155
Discount Schedule	PC21
Gtin	3595861136151
Returnability	No
Country Of Origin	FR

Packing Units

Unit Type Of Package 1	PCE
Number Of Units In Package 1	1
Package 1 Height	1.97 in (5.0 cm)
Package 1 Width	6.50 in (16.5 cm)
Package 1 Length	12.20 in (31.0 cm)
Package 1 Weight	16.72 oz (474.0 g)
Unit Type Of Package 2	S03
Number Of Units In Package 2	7
Package 2 Height	11.81 in (30.0 cm)
Package 2 Width	11.81 in (30.0 cm)
Package 2 Length	15.75 in (40.0 cm)
Package 2 Weight	7.31 lb(US) (3.318 kg)

Contractual warranty

Warranty	18 months

Sustainability

Green Premium™ label is Schneider Electric's commitment to delivering products with best-in-class environmental performance. Green Premium promises compliance with the latest regulations, transparency on environmental impacts, as well as circular and low-CO_2 products.

Guide to assessing product sustainability is a white paper that clarifies global eco-label standards and how to interpret environmental declarations.

Learn more about Green Premium >

Guide to assess a product's sustainability >

RoHS/REACh

Well-being performance

Reach Free Of Svhc	
Mercury Free	
Rohs Exemption Information	Yes

Certifications & Standards

Eu Rohs Directive	Pro-active compliance (Product out of EU RoHS legal scope) EU RoHS Declaration
China Rohs Regulation	China RoHS declaration
Weee	The product must be disposed on European Union markets following specific waste collection and never end up in rubbish bins.
Circularity Profile	End of Life Information
California Proposition 65	WARNING: This product can expose you to chemicals including: Lead and lead compounds, which is known to the State of California to cause cancer and birth defects or other reproductive harm. For more information go to www.P65Warnings.ca.gov

Dimensions Drawings

Racks for Modules Mounting

Dimensions of Modules and Racks

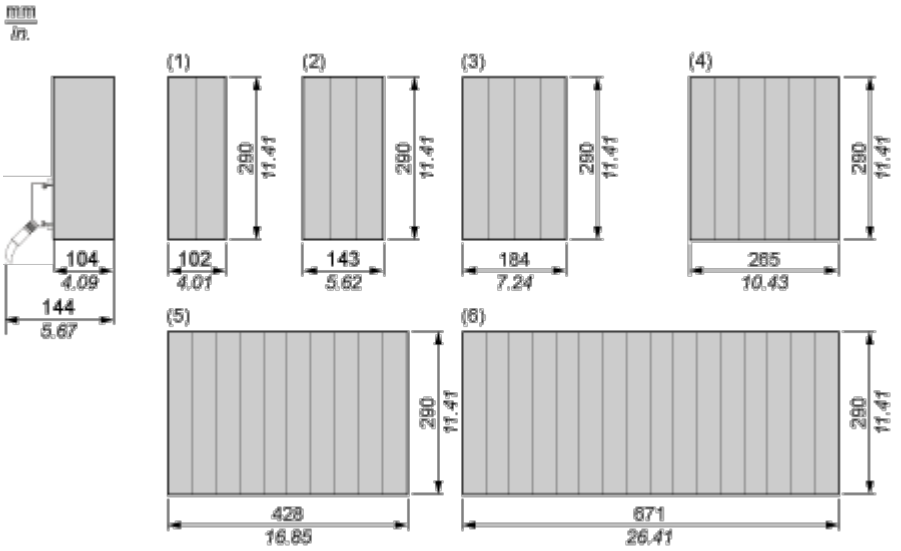

(1) 2 slots

(2) 3 slots

(3) 4 slots

(4) 6 slots

(5) 10 slots

(6) 16 slots

Connections and Schema

Analog Input 8-Channel Bipolar Module

Wiring Diagram

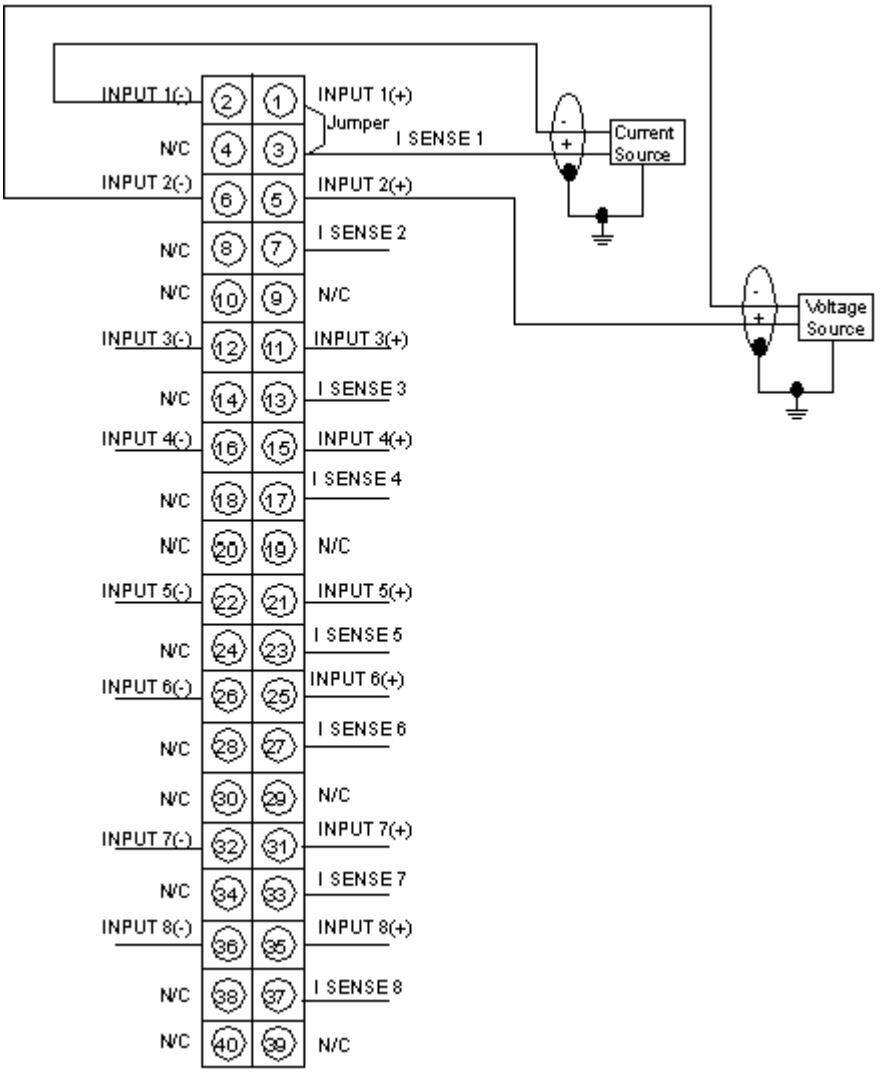

N/C Not Connected